OPAx388 精密、零漂移、零交叉、真正的轨至轨输入/输出运算放大器

1 特性

- 超低失调电压：±0.25μV
- 零漂移：±0.005μV/°C
- 零交叉：140dB CMRR 真正 RRIO
- 低噪声：7.0nV √Hz （1kHz 时）
- 无 1/f 噪声：140nV$_{PP}$（0.1Hz 至 10Hz）
- 快速稳定：2μs（1V，0.01%）
- 增益带宽：10MHz
- 单电源：2.5V 至 5.5V
- 双电源：±1.25V 至 ±2.75V
- 真正的轨至轨输入和输出
- EMI/RFI 滤波输入
- 行业标准封装：
  - 单通道电源版本采用 SOIC-8、SOT-23-5 和 VSSOP-8 封装
  - 双通道电源版本采用 SOIC-8 和 VSSOP-8 封装
  - 四通道电源版本采用 SOIC-14 和 TSSOP-14 封装

2 应用

- 商用网络和服务器 PSU
- 笔记本电脑电源适配器设计
- 称重计
- 实验室和现场仪表
- 电池测试
- 电子温度计
- 温度变送器

3 说明

OPAx388（OPA388、OPA2388 和 OPA4388）系列精密运算放大器是超低噪声、快速稳定、零漂移、零交叉器件，可实现轨至轨输入和输出运行。这些特性及出色的交流性能与仅为 0.25μV 的失调电压以及 0.005μV/°C 的温漂相结合，使得 OPAx388 成为驱动高精密模数转换器 (ADC) 或缓冲高分辨率数模转换器 (DAC) 输出的理想选择。该设计在驱动模数转换器 (ADC) 时具有出色的性能，而不会降低线性度。OPA388（单通道版本）提供 VSSOP-8、SOT23-5 和 SOIC-8 三种封装。OPA2388（双通道版本）提供 VSSOP-8 和 SO-8 两种封装。OPA4388（四通道版本）提供 TSSOP-14 和 SO-14 两种封装。所有版本的额定工作温度范围均为 -40°C 至 +125°C。

器件信息

器件型号	封装(1)	封装尺寸（标称值）
OPA388	SOIC (8)	4.90mm × 3.90mm
	SOT-23 (5)	2.90mm × 1.60mm
	VSSOP (8)	3.00mm × 3.00mm
OPA2388	SOIC (8)	4.90mm × 3.90mm
	VSSOP (8)	3.00mm × 3.00mm
OPA4388	SOIC (14)	8.65mm x 3.90mm
	TSSOP (14)	5.00mm x 4.40mm

(1) 如需了解所有可用封装，请参阅数据表末尾的封装选项附录。

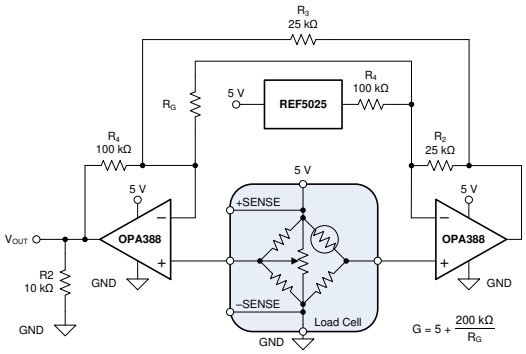

高 CMRR 仪表放大器应用中的 OPA388

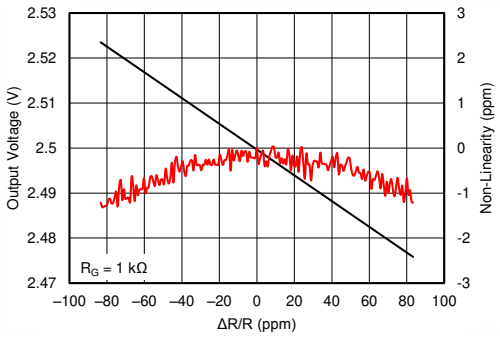

OPA388 支持高精度、低误差测量

本文档旨在为方便起见，提供有关 TI 产品中文版本的信息，以确认产品的概要。有关适用的官方英文版本的最新信息，请访问 www.ti.com，其内容始终优先。TI 不保证翻译的准确性和有效性。在实际设计之前，请务必参考最新版本的英文版本。

Table of Contents

1 特性 1
2 应用 1
3 说明 1
4 Revision History 2
5 Pin Configuration and Functions 4
6 Specifications 6
6.1 Absolute Maximum Ratings 6
6.2 ESD Ratings 6
6.3 Recommended Operating Conditions 6
6.4 Thermal Information: OPA388 6
6.5 Thermal Information: OPA2388 7
6.6 Thermal Information: OPA4388 7
6.7 Electrical Characteristics: VS = ±1.25 V to ±2.75 V (VS = 2.5 to 5.5 V) 7
6.8 Typical Characteristics 10
7 Detailed Description 18
7.1 Overview 18
7.2 Functional Block Diagram 18
7.3 Feature Description 19
7.4 Device Functional Modes 20
8 Application and Implementation 21
8.1 Application Information 21
8.2 Typical Applications 21
9 Power Supply Recommendations 25
10 Layout 26
10.1 Layout Guidelines 26
10.2 Layout Example 26
11 Device and Documentation Support 27
11.1 Device Support 27
11.2 Documentation Support 27
11.3 Related Links 27
11.4 Receiving Notification of Documentation Updates 28
11.5 Support Resources 28
11.6 Trademarks 28
11.7 Electrostatic Discharge Caution 28
11.8 Glossary 28
12 Mechanical, Packaging, and Orderable Information 28

4 Revision History

注：以前版本的页码可能与当前版本的页码不同

Changes from Revision C (May 2019) to Revision D (July 2020) — **Page**

- 将 OPA2388 SOIC-8 (D) 封装从“预告信息（预发布）”更改为“生产数据（正在供货）” 1
- 更改了典型应用原理图，以显示引用标识符的正确位置 1
- Changed Figure 8-5 to show correct locations for reference designators 25

Changes from Revision B (January 2019) to Revision C (May 2019) — **Page**

- 将 OPA4388 从“预告信息（预发布）”更改为“生产数据（正在供货）” 1
- Added VOS specifications for OPA4388 7
- Added dVOS/dT specifications for OPA4388 7
- Added PSRR specifications for OPA4388 7
- Added IB specifications for OPA4388 7
- Added IOS specifications for OPA4388 7
- Added CMRR specifications for OPA4388 7
- Added AOL specifications for OPA4388 7

Changes from Revision A (July 2018) to Revision B (January 2019) — **Page**

- 将 OPA388 DBV (SOT-23) 封装从“预发布”更改为“生产数据” 1
- Deleted redundant temperature specification in EC table 7
- Added Figure 6, *Offset Voltage vs Supply Voltage: OPA4388* 10
- Added Figure 7, *Offset Voltage Long Term Drift* 10
- Changed Figure 50, *OPA388 Layout Example*; updated for accuracy 26

Copyright © 2020 Texas Instruments Incorporated

Changes from Revision * (December 2016) to Revision A (July 2018) **Page**

- 将器件状态从“生产数据”更改为“生产数据/混合状态” 1
- 添加了 TI 参考设计的顶部导航链接 1
- 在*器件信息*表中，向 5 引脚 SOT-23 (OPA388)、8 引脚 SOIC (OPA2388)、14 引脚 SOIC 和 14 引脚 TSSOP (OPA4388) 封装添加了预发布说明 1
- Added package preview notes to *Pin Configuration and Functions* section 4
- AOL test condition changed to 0.15 V from 0.1 V 7
- AOL test condition changed to 0.15 V from 0.1 V 7
- AOL test condition changed to 0.25 V from 0.2 V 7
- AOL test condition changed to 0.3 V from 0.25 V 7

5 Pin Configuration and Functions

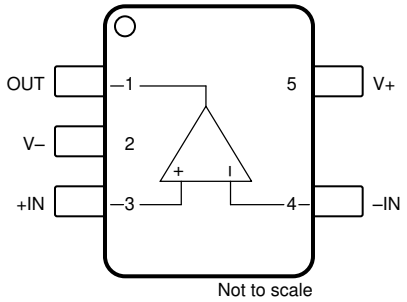

图 5-1. OPA388 DBV Package, 5-Pin SOT-23, Top View

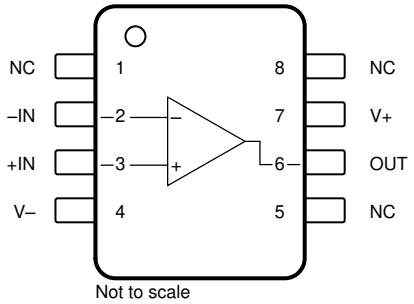

图 5-2. OPA388 D and DGK Packages, 8-Pin SOIC and VSSOP, Top View

Pin Functions: OPA388

PIN			I/O	DESCRIPTION
NAME	OPA388			
	D (SOIC), DGK (VSSOP)	DBV (SOT-23)		
–IN	2	4	I	Inverting input
+IN	3	3	I	Noninverting input
NC	1, 5, 8	—	—	No internal connection (can be left floating)
OUT	6	1	O	Output
V–	4	2	—	Negative (lowest) power supply
V+	7	5	—	Positive (highest) power supply

Copyright © 2020 Texas Instruments Incorporated

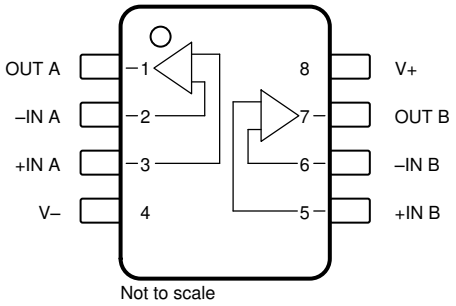

图 5-3. OPA2388 8-Pin SOIC (D) Package and 8-Pin VSSOP (DGK) Package, Top View

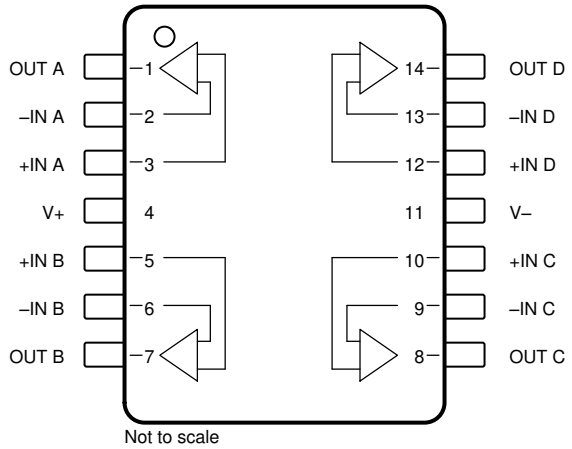

图 5-4. OPA4388 14-Pin SOIC (D) and TSSOP-14 (PW) Packages, Top View

Pin Functions: OPA2388 and OPA4388

PIN			I/O	DESCRIPTION
NAME	OPA2388 D (SOIC), DGK (VSSOP)	OPA4388 D (SOIC), PW (TSSOP)		
–IN A	2	2	I	Inverting input, channel A
–IN B	6	6	I	Inverting input, channel B
–IN C	—	9	I	Inverting input, channel C
–IN D	—	13	I	Inverting input, channel D
+IN A	3	3	I	Noninverting input, channel A
+IN B	5	5	I	Noninverting input, channel B
+IN C	—	10	I	Noninverting input, channel C
+IN D	—	12	I	Noninverting input, channel D
OUT A	1	1	O	Output, channel A
OUT B	7	7	O	Output, channel B
OUT C	—	8	O	Output, channel C
OUT D	—	14	O	Output, channel D
V–	4	11	—	Negative (lowest) power supply
V+	8	4	—	Positive (highest) power supply

6 Specifications

6.1 Absolute Maximum Ratings

over operating free-air temperature range (unless otherwise noted)[1]

			MIN	MAX	UNIT
Supply voltage	V_S = (V+) – (V–)	Single-supply		6	V
		Dual-supply		±3	
Signal input pins	Voltage	Common-mode	(V–) – 0.5	(V+) + 0.5	V
		Differential		(V+) – (V–) + 0.2	
	Current			±10	mA
Output short circuit[2]			Continuous	Continuous	
Temperature	Operating, T_A		–55	150	°C
	Junction, T_J			150	
	Storage, T_{stg}		–65	150	

(1) Stresses beyond those listed under *Absolute Maximum Ratings* may cause permanent damage to the device. These are stress ratings only, which do not imply functional operation of the device at these or any other conditions beyond those indicated under *Recommended Operating Conditions*. Exposure to absolute-maximum-rated conditions for extended periods may affect device reliability.

(2) Short-circuit to ground, one amplifier per package.

6.2 ESD Ratings

			VALUE	UNIT
$V_{(ESD)}$	Electrostatic discharge	Human-body model (HBM), per ANSI/ESDA/JEDEC JS-001[1]	±4000	V
		Charged-device model (CDM), per JEDEC specification JESD22-C101[2]	±1000	

(1) JEDEC document JEP155 states that 500-V HBM allows safe manufacturing with a standard ESD control process.

(2) JEDEC document JEP157 states that 250-V CDM allows safe manufacturing with a standard ESD control process.

6.3 Recommended Operating Conditions

over operating free-air temperature range (unless otherwise noted)

		MIN	NOM	MAX	UNIT
Supply voltage, V_S = (V+) – (V–)	Single-supply	2.5		5.5	V
	Dual-supply	±1.25		±2.75	
Specified temperature		–40		125	°C

6.4 Thermal Information: OPA388

THERMAL METRIC[1]		OPA388			UNIT
		D (SOIC)	DBV (SOT-23)	DGK (VSSOP)	
		8 PINS	5 PINS	5 PINS	
$R_{\theta JA}$	Junction-to-ambient thermal resistance	116	145.7	177	°C/W
$R_{\theta JC(top)}$	Junction-to-case (top) thermal resistance	60	94.8	69	°C/W
$R_{\theta JB}$	Junction-to-board thermal resistance	56	43.4	100	°C/W
Ψ_{JT}	Junction-to-top characterization parameter	12.8	24.7	9.9	°C/W
Ψ_{JB}	Junction-to-board characterization parameter	55.9	43.1	98.3	°C/W
$R_{\theta JC(bot)}$	Junction-to-case (bottom) thermal resistance	N/A	N/A	n/a	°C/W

(1) For more information about traditional and new thermal metrics, see the *Semiconductor and IC Package Thermal Metrics* application report.

Copyright © 2020 Texas Instruments Incorporated

6.5 Thermal Information: OPA2388

THERMAL METRIC[1]		OPA2388		UNIT
		D (SOIC)	DGK (VSSOP)	
		8 PINS	8 PINS	
$R_{\theta JA}$	Junction-to-ambient thermal resistance	120.0	165	°C/W
$R_{\theta JC(top)}$	Junction-to-case (top) thermal resistance	52.3	53	°C/W
$R_{\theta JB}$	Junction-to-board thermal resistance	65.6	87	°C/W
Ψ_{JT}	Junction-to-top characterization parameter	9.6	4.9	°C/W
Ψ_{JB}	Junction-to-board characterization parameter	64.4	85	°C/W
$R_{\theta JC(bot)}$	Junction-to-case (bottom) thermal resistance	N/A	N/A	°C/W

(1) For more information about traditional and new thermal metrics, see the *Semiconductor and IC Package Thermal Metrics* application report.

6.6 Thermal Information: OPA4388

THERMAL METRIC[1]		OPA4388		UNIT
		D (SOIC)	PW (TSSOP)	
		14 PINS	14 PINS	
$R_{\theta JA}$	Junction-to-ambient thermal resistance	86.4	109.6	°C/W
$R_{\theta JC(top)}$	Junction-to-case (top) thermal resistance	46.3	27.4	°C/W
$R_{\theta JB}$	Junction-to-board thermal resistance	41.0	56.1	°C/W
Ψ_{JT}	Junction-to-top characterization parameter	11.3	1.5	°C/W
Ψ_{JB}	Junction-to-board characterization parameter	40.7	54.9	°C/W
$R_{\theta JC(bot)}$	Junction-to-case (bottom) thermal resistance	N/A	N/A	°C/W

(1) For more information about traditional and new thermal metrics, see the *Semiconductor and IC Package Thermal Metrics* application report.

6.7 Electrical Characteristics: VS = ±1.25 V to ±2.75 V (VS = 2.5 to 5.5 V)

at T_A = 25°C, V_{CM} = V_{OUT} = V_S / 2, and R_{LOAD} = 10 kΩ connected to V_S / 2 (unless otherwise noted)

PARAMETER		TEST CONDITIONS		MIN	TYP	MAX	UNIT
OFFSET VOLTAGE							
V_{OS}	Input offset voltage		OPA388, OPA2388		±0.25	±5	μV
		V_S = 5.5 V	OPA4388		±2.25	±8	
		T_A = –40°C to +125°C	OPA388, OPA2388			±7.5	
		T_A = –40°C to +125°C, V_S = 5.5 V	OPA4388			±10.5	
dV_{OS}/dT	Input offset voltage drift	T_A = –40°C to +125°C	OPA388, OPA2388		±0.005	±0.05	μV/°C
		T_A = –40°C to +125°C, V_S = 5.5 V	OPA4388		±0.005	±0.05	
PSRR	Power-supply rejection ratio	T_A = –40°C to +125°C	OPA388, OPA2388		±0.1	±1	μV/V
			OPA4388		±1.25	±3.5	

at T_A = 25°C, V_{CM} = V_{OUT} = V_S / 2, and R_{LOAD} = 10 kΩ connected to V_S / 2 (unless otherwise noted)

PARAMETER		TEST CONDITIONS		MIN	TYP	MAX	UNIT
INPUT BIAS CURRENT							
I_B	Input bias current	R_{IN} = 100 kΩ, OPA388, OPA2388			±30	±350	pA
			T_A = 0°C to +85°C			±400	
			T_A = –40°C to +125°C			±700	
		R_{IN} = 100 kΩ, OPA4388			±30	±500	
			T_A = 0°C to +85°C			±600	
			T_A = –40°C to +125°C			±800	
I_{OS}	Input offset current	R_{IN} = 100 kΩ, OPA388, OPA2388				±700	
			T_A = 0°C to +85°C			±800	
			T_A = –40°C to +125°C			±800	
		R_{IN} = 100 kΩ, OPA4388				±1000	
			T_A = 0°C to +85°C			±1100	
			T_A = –40°C to +125°C			±1100	
NOISE							
E_N	Input voltage noise	f = 0.1 Hz to 10 Hz			0.14		μV_{PP}
e_N	Input voltage noise density	f = 10 Hz			7		nV/√Hz
		f = 100 Hz			7		
		f = 1 kHz			7		
		f = 10 kHz			7		
I_N	Input current noise density	f = 1 kHz			100		fA/√Hz
INPUT VOLTAGE							
V_{CM}	Common-mode voltage range			(V–) – 0.1		(V+) + 0.1	V
CMRR	Common-mode rejection ratio	(V–) – 0.1 V < V_{CM} < (V+) + 0.1 V	V_S = ±1.25 V OPA388, OPA2388	124	138		dB
			V_S = ±1.25 V OPA4388	102	110		
			V_S = ±2.75 V	124	140		
		(V–) < V_{CM} < (V+) + 0.1 V, T_A = –40°C to +125°C	V_S = ±1.25 V OPA388, OPA2388	114	134		
			V_S = ±1.25 V OPA4388	102	107		
		(V–) – 0.05 V < V_{CM} < (V+) + 0.1 V, T_A = –40°C to +125°C	V_S = ±2.75 V	124	140		
INPUT IMPEDANCE							
z_{id}	Differential input impedance				100 || 2		MΩ || pF
z_{ic}	Common-mode input impedance				60 || 4.5		TΩ || pF

Copyright © 2020 Texas Instruments Incorporated

at T_A = 25°C, V_{CM} = V_{OUT} = V_S / 2, and R_{LOAD} = 10 kΩ connected to V_S / 2 (unless otherwise noted)

PARAMETER		TEST CONDITIONS		MIN	TYP	MAX	UNIT
OPEN-LOOP GAIN							
A_{OL}	Open-loop voltage gain	(V–) + 0.15 V < V_O < (V+) – 0.15 V, R_{LOAD} = 10 kΩ		126	148		dB
		(V–) + 0.15 V < V_O < (V+) – 0.15 V, R_{LOAD} = 10 kΩ, T_A = –40°C to +125°C	OPA388, OPA2388	120	126		
		(V–) + 0.15 V < V_O < (V+) – 0.15 V, R_{LOAD} = 10 kΩ, V_S = 5.5 V T_A = –40°C to +125°C	OPA4388	120	126		
		(V–) + 0.25 V < V_O < (V+) – 0.25 V, R_{LOAD} = 2 kΩ		126	148		
		(V–) + 0.30 V < V_O < (V+) – 0.30 V, R_{LOAD} = 2 kΩ	OPA388, OPA2388	120	148		
		(V–) + 0.30 V < V_O < (V+) – 0.30 V, R_{LOAD} = 2 kΩ, V_S = 5.5 V T_A = –40°C to +125°C	OPA4388	120	126		
FREQUENCY RESPONSE							
GBW	Unity-gain bandwidth				10		MHz
SR	Slew rate	G = 1, 4-V step			5		V/µs
THD+N	Total harmonic distortion + noise	G = 1, f = 1 kHz, V_O = 1 V_{RMS}			0.0005%		
t_S	Settling time	To 0.1%	V_S = ±2.5 V, G = 1, 1-V step		0.75		µs
		To 0.01%	V_S = ±2.5 V, G = 1, 1-V step		2		µs
t_{OR}	Overload recovery time	V_{IN} × G = V_S			10		µs
OUTPUT							
V_O	Voltage output swing from rail	Positive rail	No load		1	15	mV
			R_{LOAD} = 10 kΩ		5	20	
			R_{LOAD} = 2 kΩ		20	50	
		Negative rail	No load		5	15	
			R_{LOAD} = 10 kΩ		10	20	
			R_{LOAD} = 2 kΩ		40	60	
		T_A = –40°C to +125°C, both rails, R_{LOAD} = 10 kΩ			10	25	
I_{SC}	Short-circuit current	V_S = 5.5 V			±60		mA
		V_S = 2.5 V			±30		mA
C_{LOAD}	Capacitive load drive	See 图 6-26					
Z_O	Open-loop output impedance	f = 1 MHz, I_O = 0 A, see 图 6-25			100		Ω
POWER SUPPLY							
I_Q	Quiescent current per amplifier	V_S = ±1.25 V (V_S = 2.5 V)	I_O = 0 A		1.7	2.4	mA
			T_A = –40°C to +125°C, I_O = 0 A		1.7	2.4	
		V_S = ±2.75 V (V_S = 5.5 V)	I_O = 0 A		1.9	2.6	
			T_A = –40°C to +125°C, I_O = 0 A		1.9	2.6	

6.8 Typical Characteristics

Table 6-1. Table of Graphs

DESCRIPTION	FIGURE
Offset Voltage Production Distribution	图 6-1
Offset Voltage Drift Distribution From –40°C to +125°C	图 6-2
Offset Voltage vs Temperature	图 6-3
Offset Voltage vs Common-Mode Voltage	图 6-4
Offset Voltage vs Power Supply: OPA388 and OPA2388	图 6-5
Offset Voltage vs Power Supply: OPA4388	图 6-6
Offset Voltage Long Term Drift	图 6-7
Open-Loop Gain and Phase vs Frequency	图 6-8
Closed-Loop Gain and Phase vs Frequency	图 6-9
Input Bias Current vs Common-Mode Voltage	图 6-10
Input Bias Current vs Temperature	图 6-11
Output Voltage Swing vs Output Current (Maximum Supply)	图 6-12
CMRR and PSRR vs Frequency	图 6-13
CMRR vs Temperature	图 6-14
PSRR vs Temperature	图 6-15
0.1-Hz to 10-Hz Noise	图 6-16
Input Voltage Noise Spectral Density vs Frequency	图 6-17
THD+N Ratio vs Frequency	图 6-18
THD+N vs Output Amplitude	图 6-19
Spectral Content	图 6-20, 图 6-21
Quiescent Current vs Supply Voltage	图 6-22
Quiescent Current vs Temperature	图 6-23
Open-Loop Gain vs Temperature	图 6-24
Open-Loop Output Impedance vs Frequency	图 6-25
Small-Signal Overshoot vs Capacitive Load (10-mV Step)	图 6-26
No Phase Reversal	图 6-27
Positive Overload Recovery	图 6-28
Negative Overload Recovery	图 6-29
Small-Signal Step Response (10-mV Step)	图 6-30, 图 6-31
Large-Signal Step Response (4-V Step)	图 6-32 , 图 6-33
Settling Time	图 6-34, 图 6-35
Short-Circuit Current vs Temperature	图 6-36
Maximum Output Voltage vs Frequency	图 6-37
EMIRR vs Frequency	图 6-38

Copyright © 2020 Texas Instruments Incorporated

at T_A = 25°C, V_S = ±2.5 V, V_{CM} = V_S / 2, R_{LOAD} = 10 kΩ connected to V_S / 2, and C_L = 100 pF (unless otherwise noted)

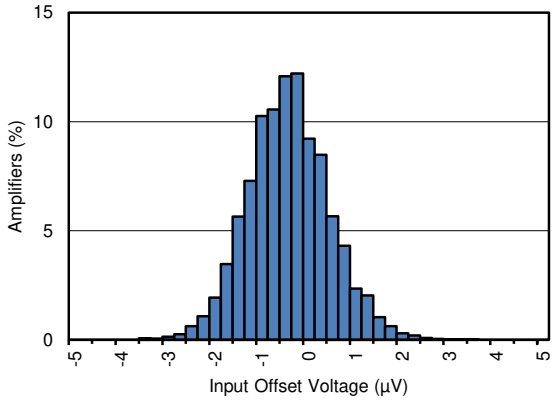

图 6-1. Offset Voltage Production Distribution

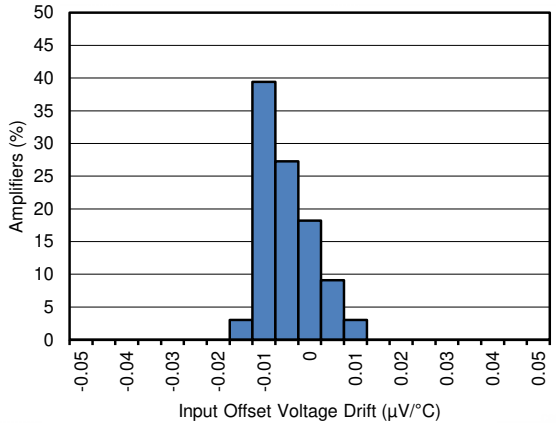

图 6-2. Offset Voltage Drift Distribution From –40°C to +125°C

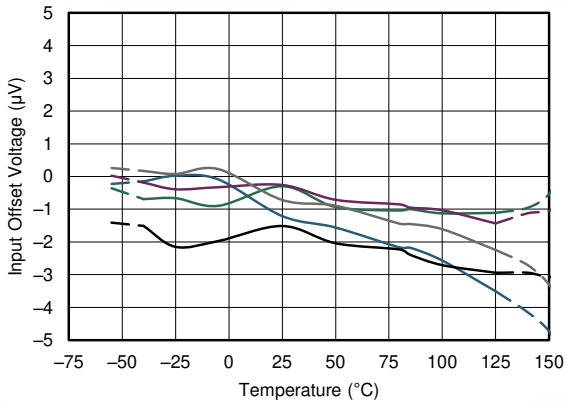

图 6-3. Offset Voltage vs Temperature

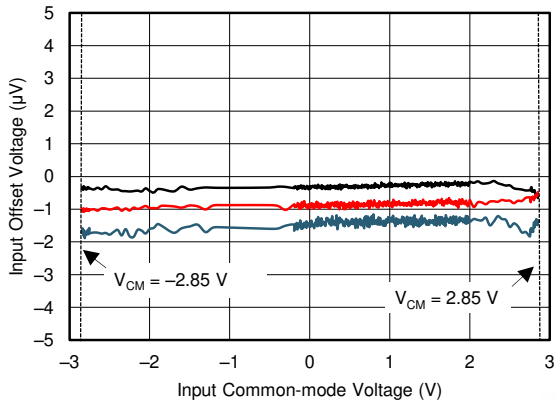

图 6-4. Offset Voltage vs Common-Mode Voltage

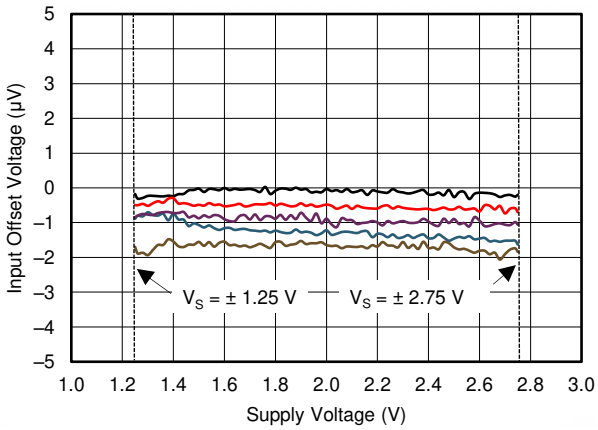

图 6-5. Offset Voltage vs Supply Voltage: OPA388 and OPA2388

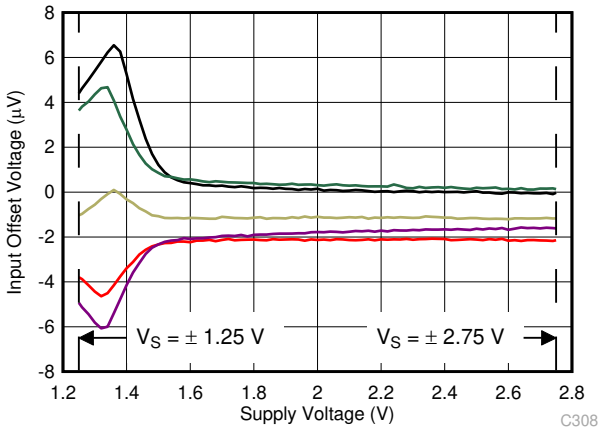

图 6-6. Offset Voltage vs Supply Voltage: OPA4388

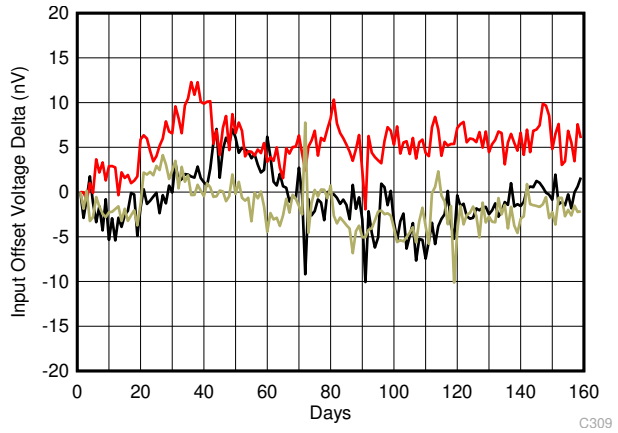

3 typical units

图 6-7. Offset Voltage Long Term Drift

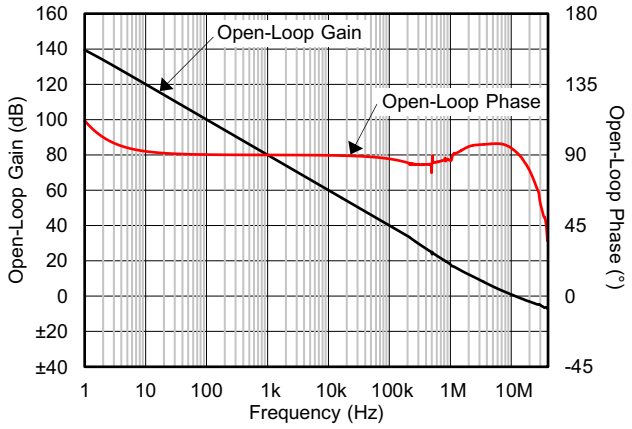

图 6-8. Open-Loop Gain and Phase vs Frequency

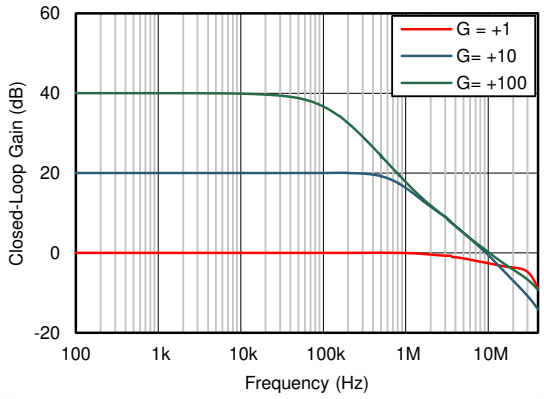

图 6-9. Closed-Loop Gain and Phase vs Frequency

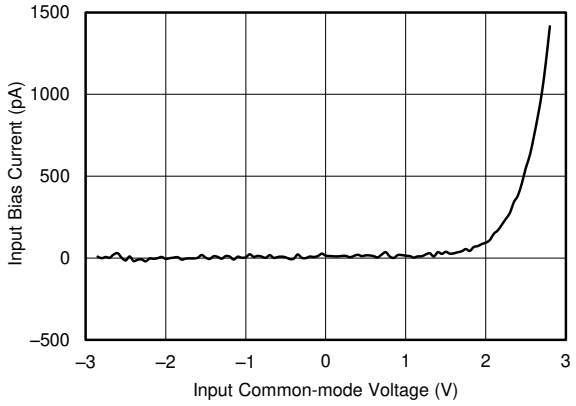

图 6-10. Input Bias Current vs Common-Mode Voltage

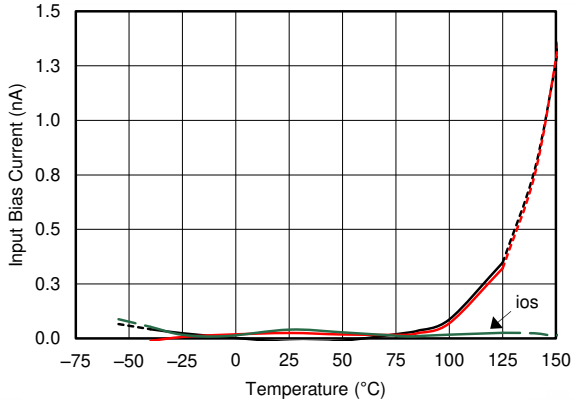

图 6-11. Input Bias Current vs Temperature

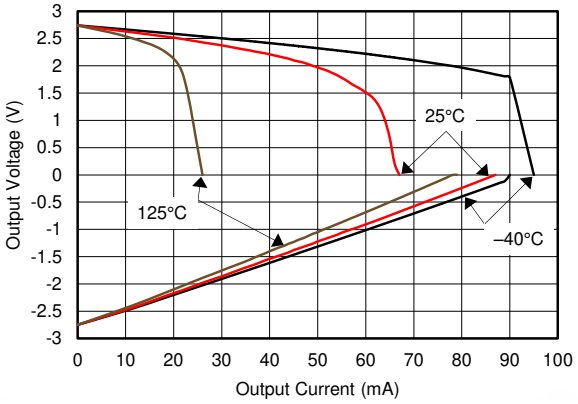

图 6-12. Output Voltage Swing vs Output Current (Maximum Supply)

Copyright © 2020 Texas Instruments Incorporated

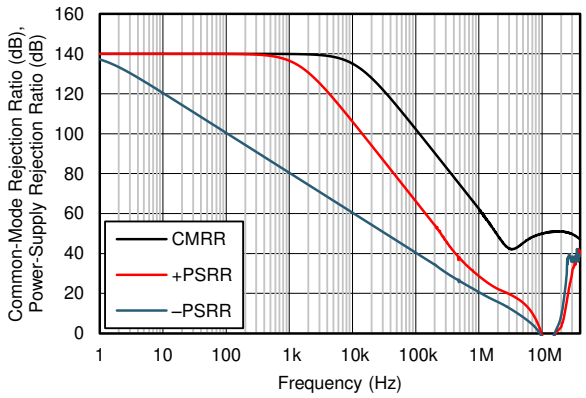

图 6-13. CMRR and PSRR vs Frequency

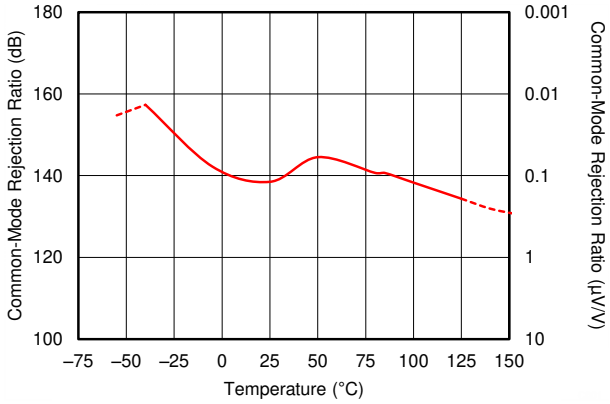

图 6-14. CMRR vs Temperature

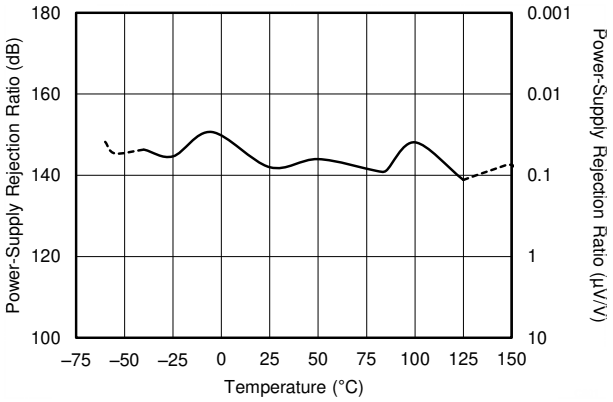

图 6-15. PSRR vs Temperature

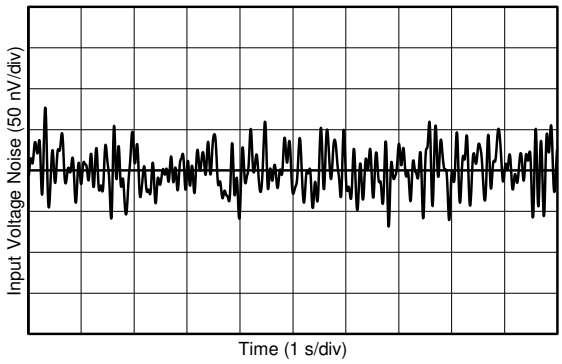

图 6-16. 0.1-Hz to 10-Hz Noise

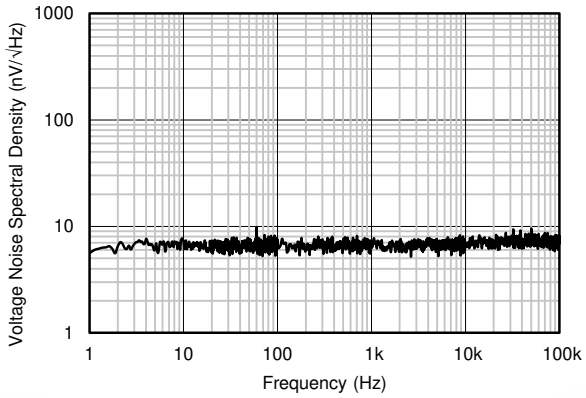

图 6-17. Input Voltage Noise Spectral Density vs Frequency

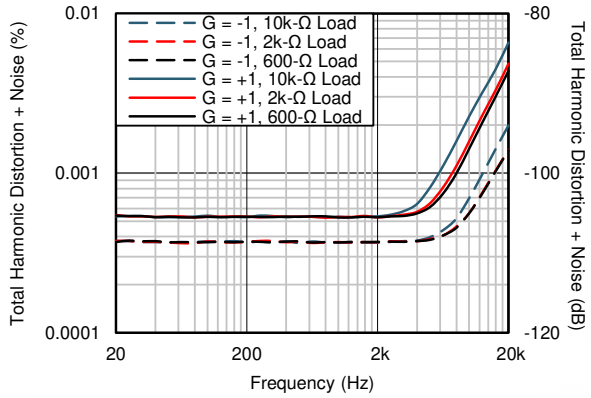

图 6-18. THD+N Ratio vs Frequency

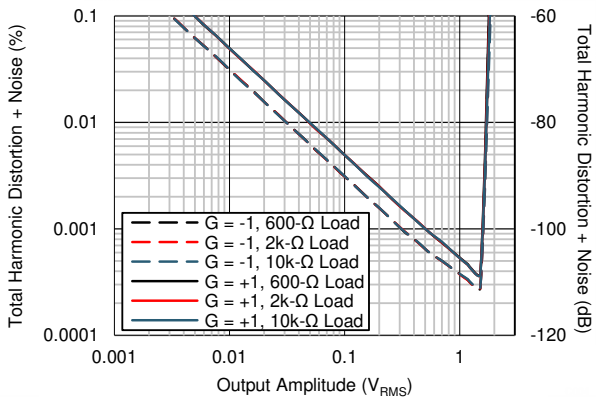

图 6-19. THD+N vs Output Amplitude

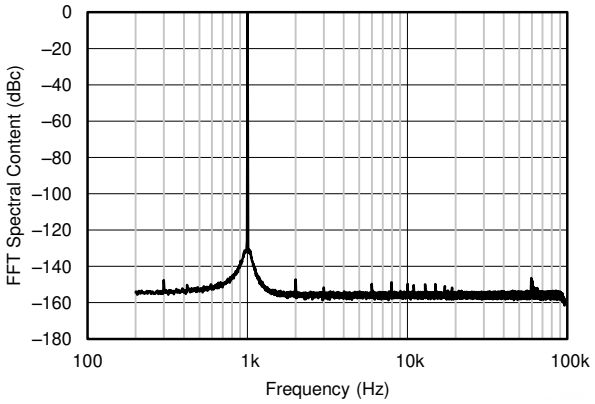

G = +1, f = 1 kHz, V_O = 4.5 V_{PP}, R_L = 10 kΩ, BW = 90 kHz

图 6-20. Spectral Content (With 10-kΩ Load)

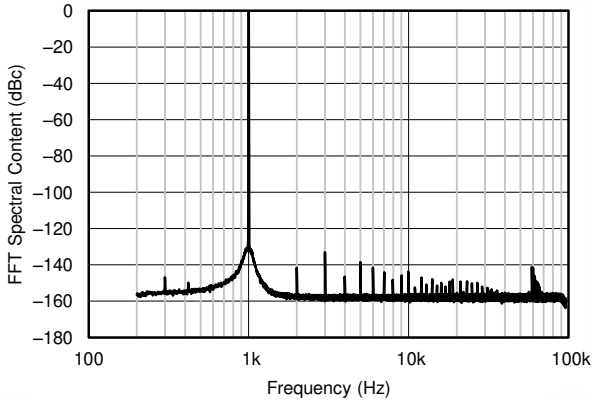

G = +1, f = 1 kHz, V_O = 4.5 V_{PP}, R_L = 2 kΩ, BW = 90 kHz

图 6-21. Spectral Content (With 2-kΩ Load)

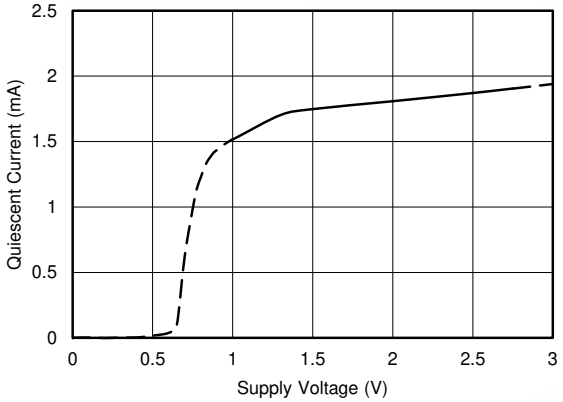

图 6-22. Quiescent Current vs Supply Voltage

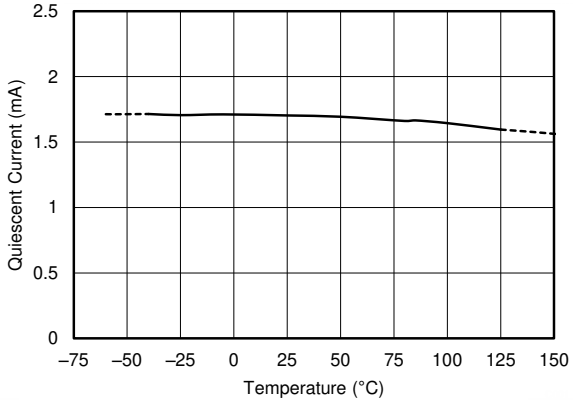

图 6-23. Quiescent Current vs Temperature

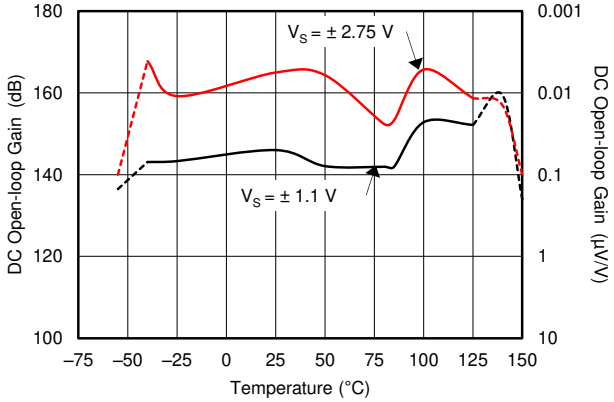

图 6-24. Open-Loop Gain vs Temperature

Copyright © 2020 Texas Instruments Incorporated

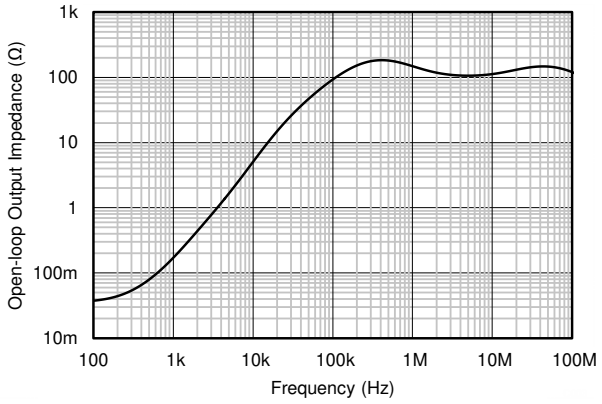

图 6-25. Open-Loop Output Impedance vs Frequency

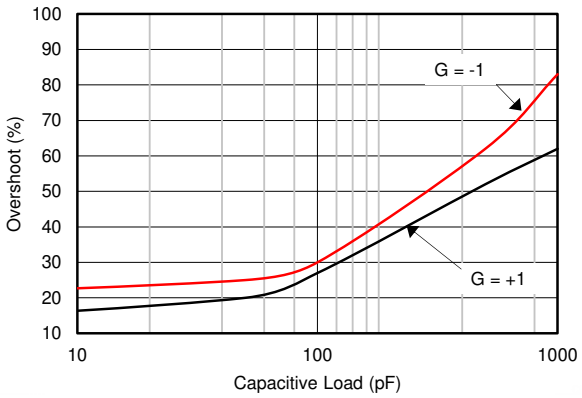

图 6-26. Small-Signal Overshoot vs Capacitive Load (10-mV Step)

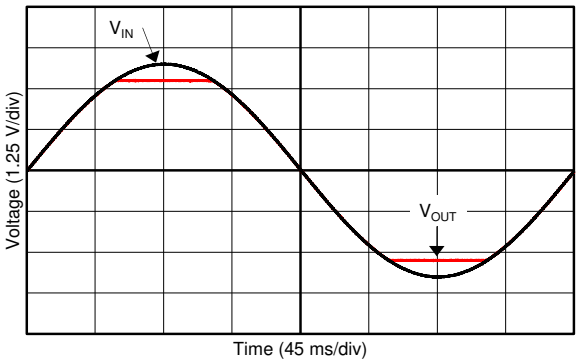

图 6-27. No Phase Reversal

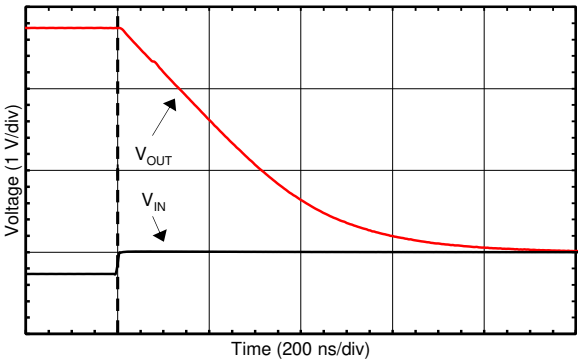

图 6-28. Positive Overload Recovery

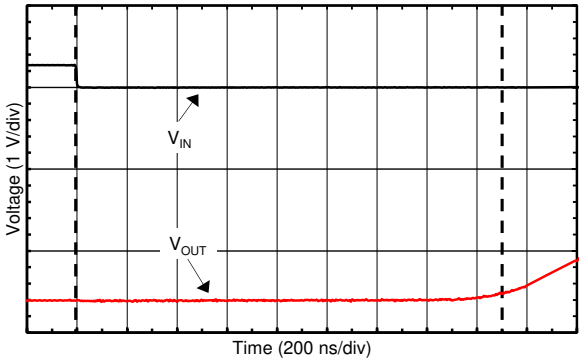

图 6-29. Negative Overload Recovery

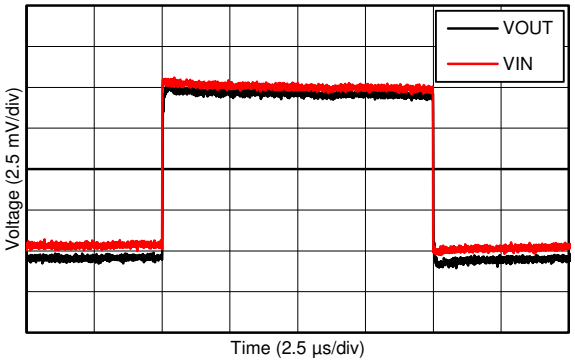

G = +1

图 6-30. Small-Signal Step Response (10-mV Step)

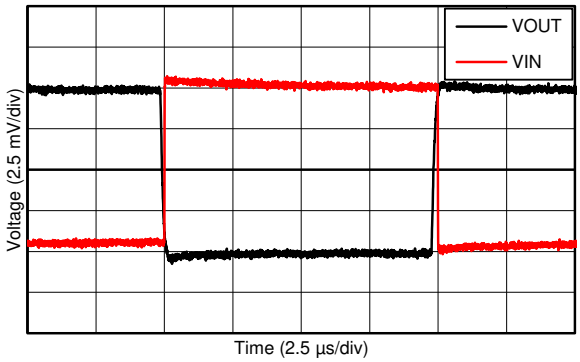

G = –1

图 6-31. Small-Signal Step Response (10-mV Step)

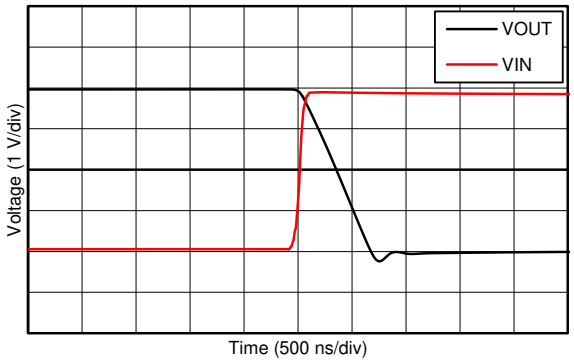

Falling output

图 6-32. Large-Signal Step Response (4-V Step)

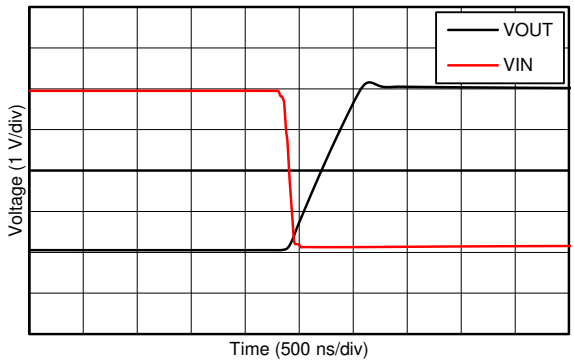

Rising output

图 6-33. Large-Signal Step Response (4-V Step)

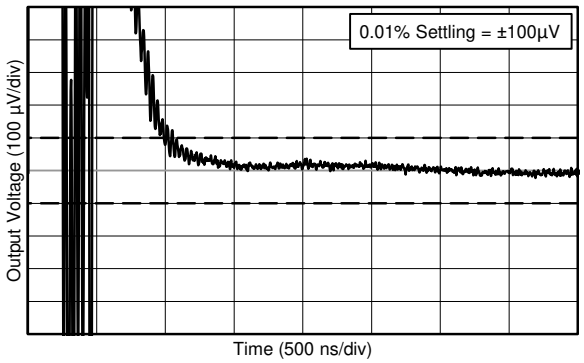

0.01% settling = ±100 µV

图 6-34. Settling Time (1-V Positive Step)

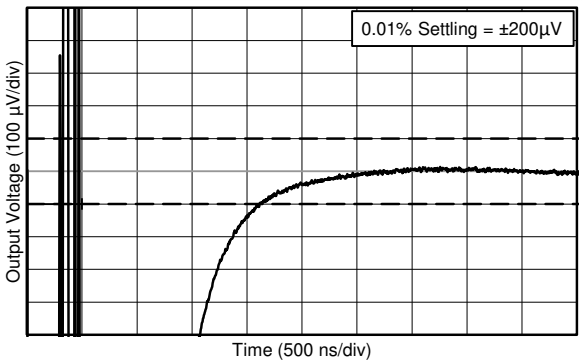

0.01% settling = ±200 µV

图 6-35. Settling Time (1-V Negative Step)

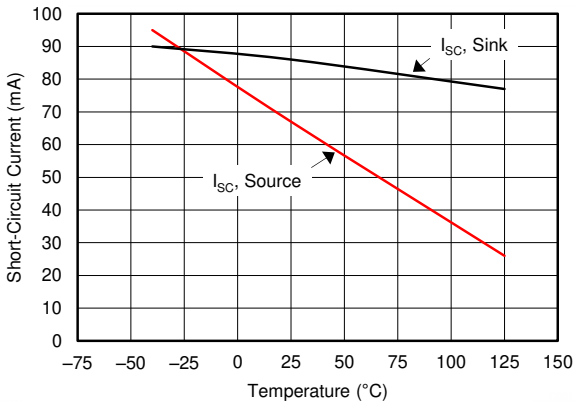

图 6-36. Short-Circuit Current vs Temperature

Copyright © 2020 Texas Instruments Incorporated

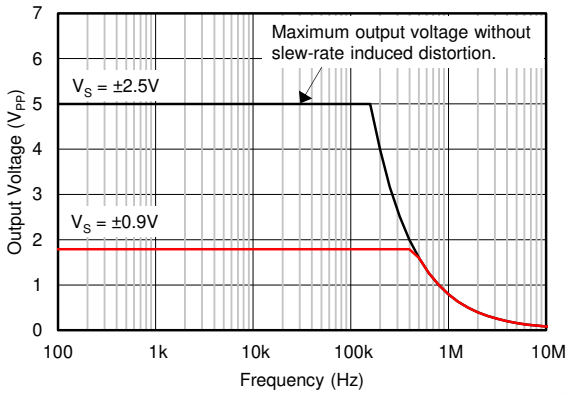

图 6-37. Maximum Output Voltage vs Frequency

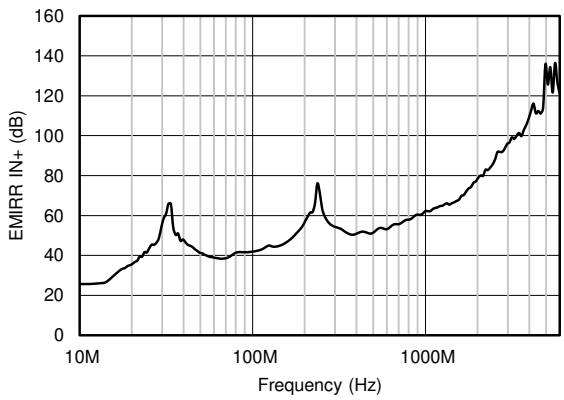

P_{RF} = – 10 dBm

图 6-38. EMIRR vs Frequency

7 Detailed Description

7.1 Overview

The OPAx388 family of zero-drift amplifiers is engineered with the unique combination of a proprietary precision auto-calibration technique paired with a low-noise, low-ripple, input charge pump. These amplifiers offer ultra-low input offset voltage and drift and achieve excellent input and output dynamic linearity. The OPAx388 operate from 2.5 V to 5.5 V, is unity-gain stable, and are designed for a wide range of general-purpose and precision applications. The integrated, low-noise charge pump allows true rail-to-rail input common-mode operation without distortion associated with complementary rail-to-rail input topologies (input crossover distortion). The OPAx388 strengths also include 10-MHz bandwidth, 7-nV/√ Hz noise spectral density, and no 1/f noise, making the OPAx388 optimal for interfacing with sensor modules and buffering high-fidelity, digital-to-analog converters (DACs).

7.2 Functional Block Diagram

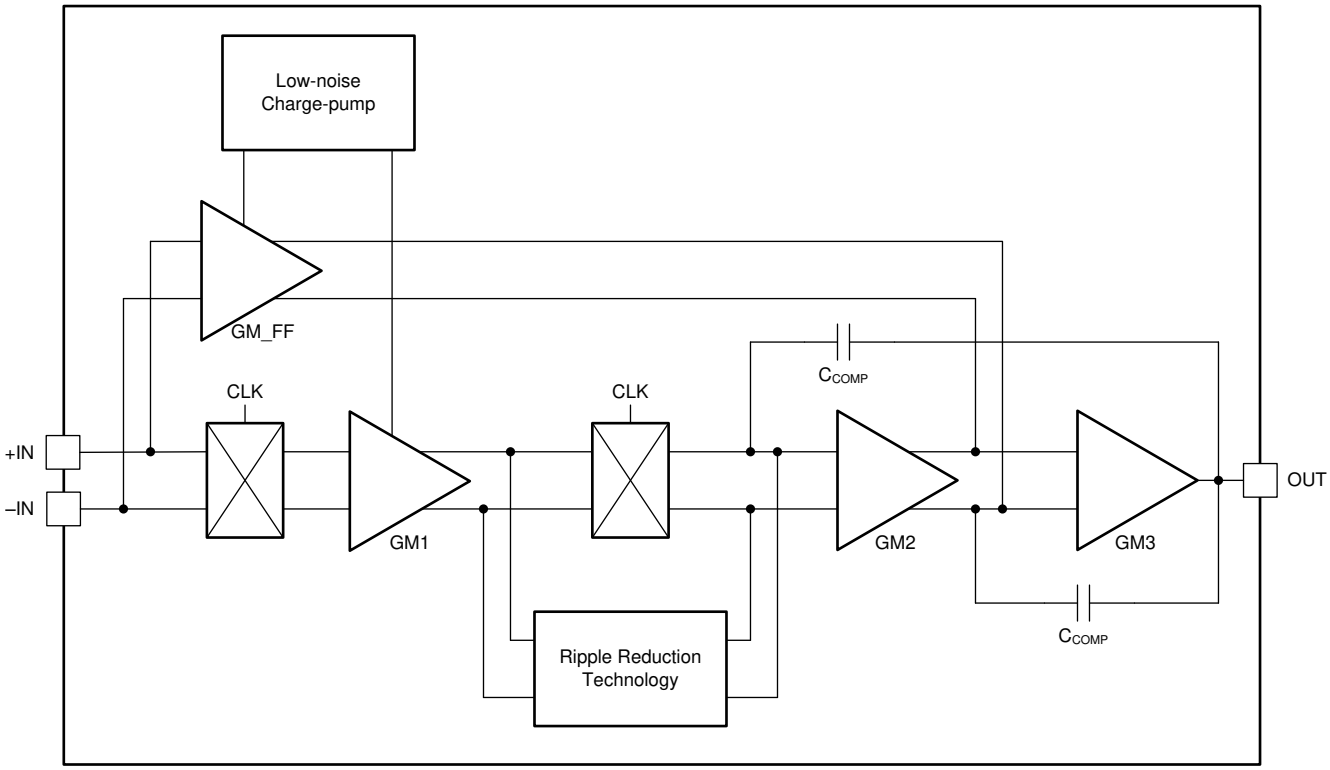

Copyright © 2016, Texas Instruments Incorporated

Copyright © 2020 Texas Instruments Incorporated

7.3 Feature Description

7.3.1 Operating Voltage

The OPAx388 family of operational amplifiers can be used with single or dual supplies from an operating range of V_S = 2.5 V (±1.25 V) up to 5.5 V (±2.75 V). Supply voltages greater than 7 V can permanently damage the device (see the *Absolute Maximum Ratings* table). Key parameters that vary over the supply voltage or temperature range are shown in the *Typical Characteristics* section.

7.3.2 Input Voltage and Zero-Crossover Functionality

The OPAx388 input common-mode voltage range extends 0.1 V beyond the supply rails. This amplifier family is designed to cover the full range without the troublesome transition region found in some other rail-to-rail amplifiers. Operating a complementary rail-to-rail input amplifier with signals traversing the transition region results in unwanted non-linear behavior and polluted spectral content. 图 7-1 and 图 7-2 contrast the performance of a traditional complementary rail-to-rail input stage amplifier with the performance of the zero-crossover OPA388. Significant harmonic content and distortion is generated during the differential pair transition (such a transition does not exist in the OPA388). Crossover distortion is eliminated through the use of a single differential pair coupled with an internal low-noise charge pump. The OPAx388 maintains noise, bandwidth, and offset performance throughout the input common-mode range, thus reducing printed circuit board (PCB) and bill of materials (BOM) complexity through the reduction of power-supply rails.

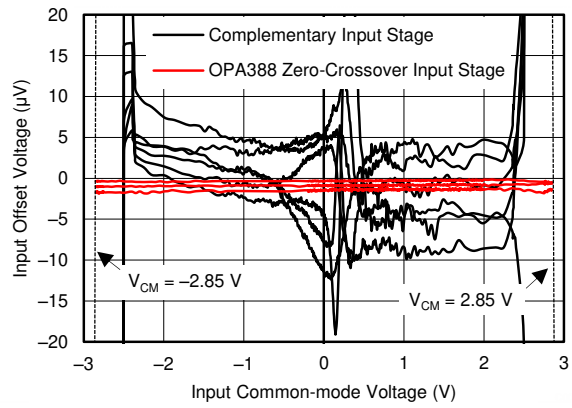

图 7-1. Input Crossover Distortion Nonlinearity

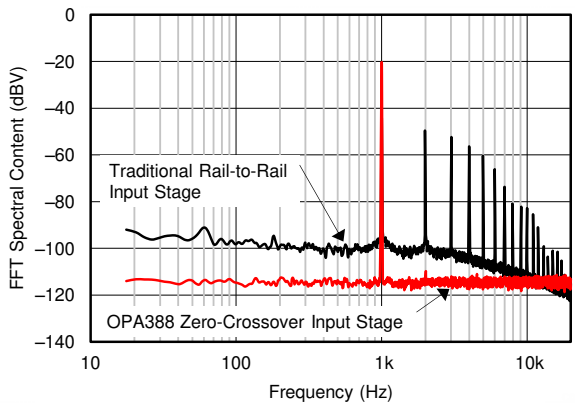

图 7-2. Input Crossover Distortion Spectral Content

Typically, input bias current is approximately ±30 pA. Input voltages exceeding the power supplies, however, can cause excessive current to flow into or out of the input pins. Momentary voltages greater than the power supply can be tolerated if the input current is limited to 10 mA. This limitation is easily accomplished with an input resistor, as shown in 图 7-3.

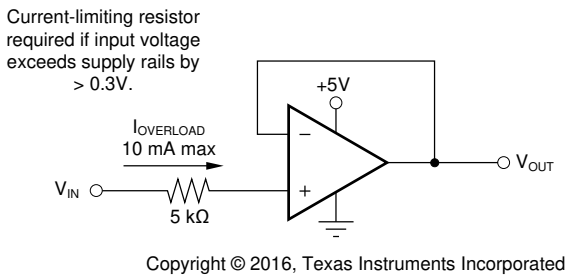

图 7-3. Input Current Protection

7.3.3 Input Differential Voltage

The typical input bias current of the OPAx388 during normal operation is approximately 30 pA. In overdriven conditions, the bias current can increase significantly. The most common cause of an overdriven condition occurs when the operational amplifier is outside of the linear range of operation. When the output of the operational amplifier is driven to one of the supply rails, the feedback loop requirements cannot be satisfied and a differential input voltage develops across the input pins. This differential input voltage results in activation of parasitic diodes inside the front-end input chopping switches that combine with 10-kΩ electromagnetic interference (EMI) filter resistors to create the equivalent circuit shown in 图 7-4. Notice that the input bias current remains within specification in the linear region.

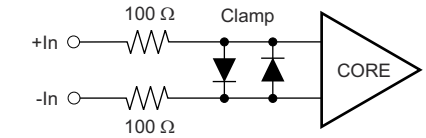

图 7-4. Equivalent Input Circuit

7.3.4 Internal Offset Correction

The OPA388 family of operational amplifiers uses an auto-calibration technique with a time-continuous, 200-kHz operational amplifier in the signal path. This amplifier is zero-corrected every 5 µs using a proprietary technique. At power-up, the amplifier requires approximately 1 ms to achieve the specified V_{OS} accuracy. This design has no aliasing or flicker noise.

7.3.5 EMI Susceptibility and Input Filtering

Operational amplifiers vary in susceptibility to EMI. If conducted EMI enters the operational amplifier, the dc offset at the amplifier output can shift from its nominal value when EMI is present. This shift is a result of signal rectification associated with the internal semiconductor junctions. Although all operational amplifier pin functions can be affected by EMI, the input pins are likely to be the most susceptible. The OPAx388 operational amplifier family incorporates an internal input low-pass filter that reduces the amplifier response to EMI. Both common-mode and differential-mode filtering are provided by the input filter. The filter is designed for a cutoff frequency of approximately 20 MHz (–3 dB), with a rolloff of 20 dB per decade.

7.4 Device Functional Modes

The OPA388 has a single functional mode and is operational when the power-supply voltage is greater than 2.5 V (±1.25 V). The maximum specified power-supply voltage for the OPAx388 is 5.5 V (±2.75 V).

Copyright © 2020 Texas Instruments Incorporated

8 Application and Implementation

Note

Information in the following applications sections is not part of the TI component specification, and TI does not warrant its accuracy or completeness. TI’s customers are responsible for determining suitability of components for their purposes. Customers should validate and test their design implementation to confirm system functionality.

8.1 Application Information

The OPAx388 is a unity-gain stable, precision operational amplifier family free from unexpected output and phase reversal. The use of proprietary zero-drift circuitry gives the benefit of low input offset voltage over time and temperature, as well as lowering the 1/f noise component. As a result of the high PSRR, these devices work well in applications that run directly from battery power without regulation. The OPAx388 family is optimized for full rail-to-rail input, allowing for low-voltage, single-supply operation or split-supply use. These miniature, high-precision, low-noise amplifiers offer high-impedance inputs that have a common-mode range 100 mV beyond the supplies without input crossover distortion and a rail-to-rail output that swings within 5 mV of the supplies under normal test conditions. The OPAx388 series of precision amplifiers is designed for upstream analog signal chain applications in low or high gains, as well as downstream signal chain functions such as DAC buffering.

8.2 Typical Applications

8.2.1 Bidirectional Current-Sensing

This single-supply, low-side, bidirectional current-sensing solution detects load currents from –1 A to +1 A. The single-ended output spans from 110 mV to 3.19 V. This design uses the OPAx388 because of its low offset voltage and rail-to-rail input and output. One of the amplifiers is configured as a difference amplifier and the other amplifier provides the reference voltage.

图 8-1 shows the solution.

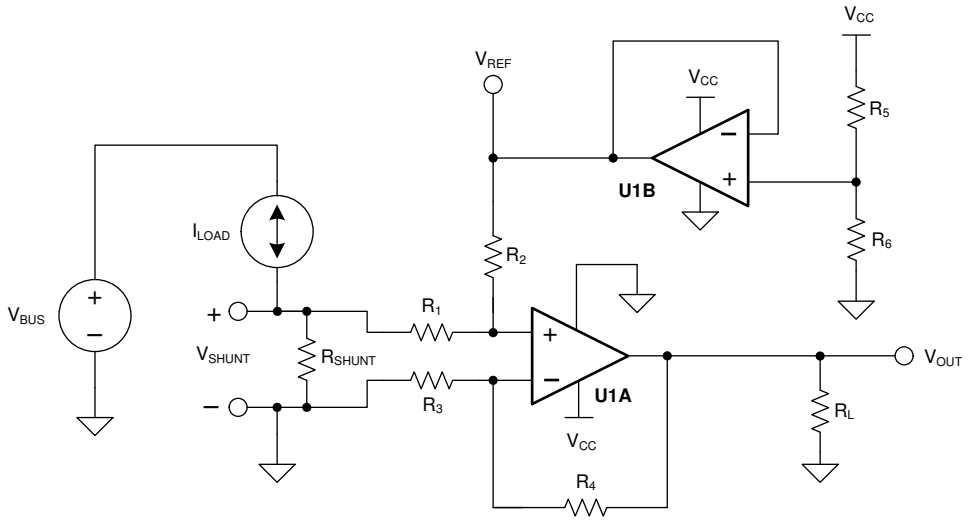

图 8-1. Bidirectional Current-Sensing Schematic

8.2.1.1 Design Requirements

This solution has the following requirements:

- Supply voltage: 3.3 V
- Input: –1 A to 1 A
- Output: 1.65 V ±1.54 V (110 mV to 3.19 V)

8.2.1.2 Detailed Design Procedure

The load current, I_{LOAD}, flows through the shunt resistor (R_{SHUNT}) to develop the shunt voltage, V_{SHUNT}. The shunt voltage is then amplified by the difference amplifier consisting of U1A and R_1 through R_4. The gain of the difference amplifier is set by the ratio of R_4 to R_3. To minimize errors, set $R_2 = R_4$ and $R_1 = R_3$. The reference voltage, V_{REF}, is supplied by buffering a resistor divider using U1B. The transfer function is given by 方程式 1.

$$V_{OUT} = V_{SHUNT} \times Gain_{Diff_Amp} + V_{REF} \tag{1}$$

where

- $V_{SHUNT} = I_{LOAD} \times R_{SHUNT}$
- $Gain_{Diff_Amp} = \frac{R_4}{R_3}$
- $V_{REF} = V_{CC} \times \left(\frac{R_6}{R_5 + R_6}\right)$

There are two types of errors in this design: offset and gain. Gain errors are introduced by the tolerance of the shunt resistor and the ratios of R_4 to R_3 and, similarly, R_2 to R_1. Offset errors are introduced by the voltage divider (R_5 and R_6) and how closely the ratio of R_4 / R_3 matches R_2 / R_1. The latter value affects the CMRR of the difference amplifier, ultimately translating to an offset error.

The value of V_{SHUNT} is the ground potential for the system load because V_{SHUNT} is a low-side measurement. Therefore, a maximum value must be placed on V_{SHUNT}. In this design, the maximum value for V_{SHUNT} is set to 100 mV. Equation 2 calculates the maximum value of the shunt resistor given a maximum shunt voltage of 100 mV and maximum load current of 1 A.

$$R_{SHUNT(Max)} = \frac{V_{SHUNT(Max)}}{I_{LOAD(Max)}} = \frac{100\ mV}{1\ A} = 100\ m\Omega \tag{2}$$

The tolerance of R_{SHUNT} is directly proportional to cost. For this design, a shunt resistor with a tolerance of 0.5% was selected. If greater accuracy is required, select a 0.1% resistor or better.

The load current is bidirectional; therefore, the shunt voltage range is –100 mV to 100 mV. This voltage is divided down by R_1 and R_2 before reaching the operational amplifier, U1A. Make sure that the voltage present at the noninverting node of U1A is within the common-mode range of the device. Therefore, use an operational amplifier, such as the OPA388, that has a common-mode range that extends below the negative supply voltage. Finally, to minimize offset error, note that the OPA388 has a typical offset voltage of merely ±0.25 µV (±5 µV maximum).

Given a symmetric load current of –1 A to 1 A, the voltage divider resistors (R_5 and R_6) must be equal. To be consistent with the shunt resistor, a tolerance of 0.5% was selected. To minimize power consumption, 10-kΩ resistors were used.

Copyright © 2020 Texas Instruments Incorporated

To set the gain of the difference amplifier, the common-mode range and output swing of the OPA388 must be considered. Equation 3 and Equation 4 depict the typical common-mode range and maximum output swing, respectively, of the OPA388 given a 3.3-V supply.

$$-100\ \text{mV} < V_{CM} < 3.4\ \text{V} \tag{3}$$

$$100\ \text{mV} < V_{OUT} < 3.2\ \text{V} \tag{4}$$

The gain of the difference amplifier can now be calculated as shown in Equation 5.

$$\text{Gain}_{\text{Diff_Amp}} = \frac{V_{OUT_Max} - V_{OUT_Min}}{R_{SHUNT} \times (I_{MAX} - I_{MIN})} = \frac{3.2\ \text{V} - 100\ \text{mV}}{100\ \text{m}\Omega \times [1\ \text{A} - (-1\text{A})]} = 15.5\ \frac{\text{V}}{\text{V}} \tag{5}$$

The resistor value selected for R_1 and R_3 was 1 kΩ. 15.4 kΩ was selected for R_2 and R_4 because this number is the nearest standard value. Therefore, the ideal gain of the difference amplifier is 15.4 V/V.

The gain error of the circuit primarily depends on R_1 through R_4. As a result of this dependence, 0.1% resistors were selected. This configuration reduces the likelihood that the design requires a two-point calibration. A simple one-point calibration, if desired, removes the offset errors introduced by the 0.5% resistors.

8.2.1.3 Application Curve

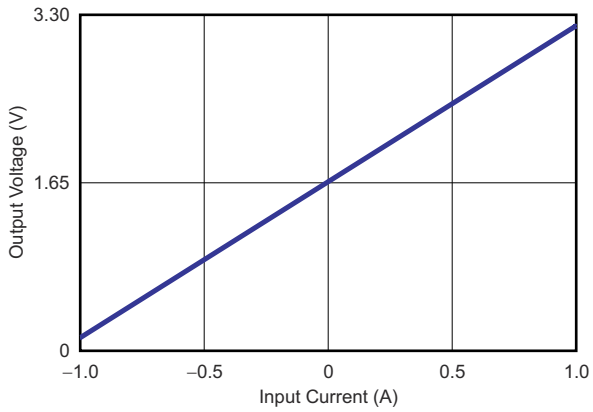

图 8-2. Bidirectional Current-Sensing Circuit Performance: Output Voltage vs Input Current

8.2.2 Single Operational Amplifier Bridge Amplifier

图 8-3 shows the basic configuration for a bridge amplifier.

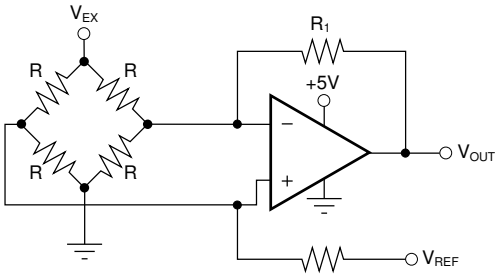

Copyright © 2016, Texas Instruments Incorporated

图 8-3. Single Operational Amplifier Bridge Amplifier Schematic

8.2.3 Precision, Low-Noise, DAC Buffer

The OPA388 can be used for a precision DAC buffer, as shown in 图 8-4, in conjunction with the DAC8830.

The OPA388 provides an ultra-low drift, precision output buffer for the DAC. A wide range of DAC codes can be used in the linear region because the OPA388 employs zero-crossover technology. A precise reference is essential for maximum accuracy because the DAC8830 is a 16-bit converter.

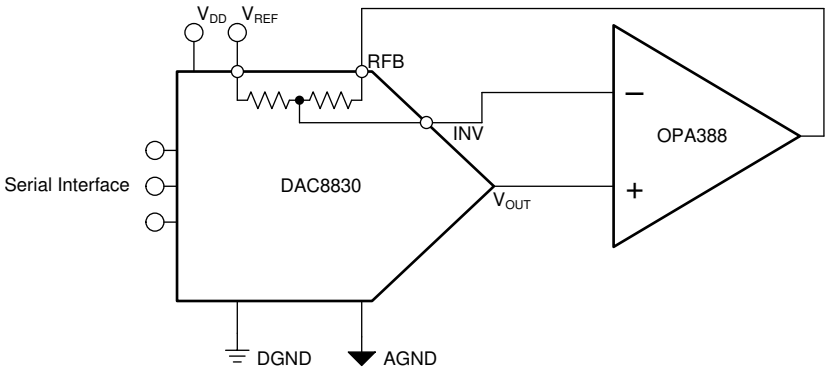

Copyright © 2016, Texas Instruments Incorporated

图 8-4. Precision DAC Buffer

Copyright © 2020 Texas Instruments Incorporated

8.2.4 Load Cell Measurement

图 8-5 shows the OPA388 in a high-CMRR dual-op amp instrumentation amplifier with a trim resistor and 6-wire load cell for precision measurement. 图 8-6 illustrates the output voltage as a function of load cell resistance change, along with the nonlinearity of the system.

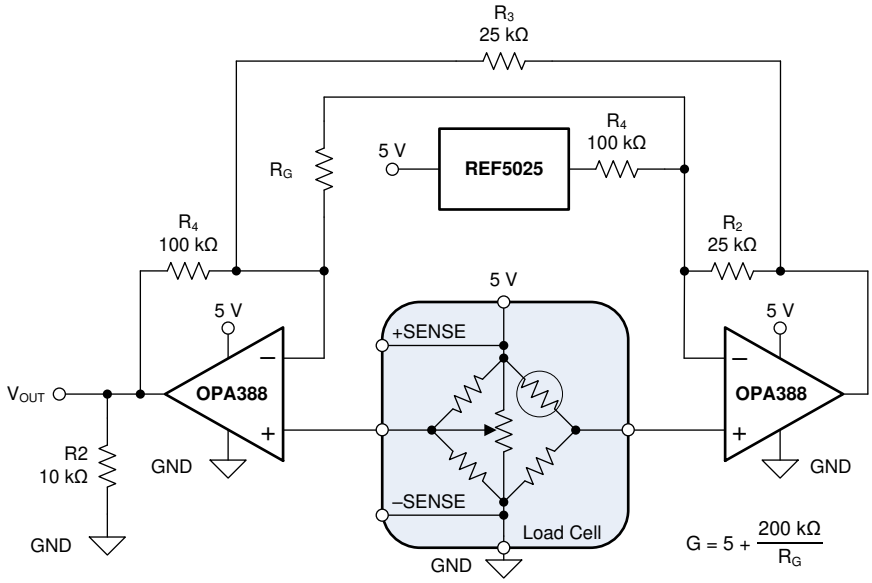

图 8-5. Load Cell Measurement Schematic

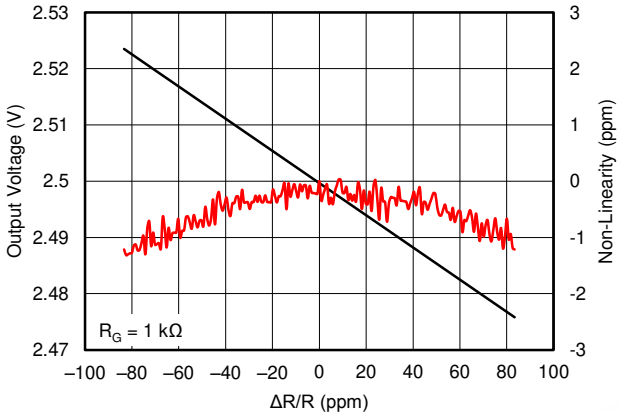

图 8-6. Load Cell Measurement Output

9 Power Supply Recommendations

The OPAx388 family of devices is specified for operation from 2.5 V to 5.5 V (±1.25 V to ±2.75 V). Parameters that can exhibit significant variance with regard to operating voltage are presented in the *Typical Characteristics* section.

10 Layout

10.1 Layout Guidelines

Paying attention to good layout practice is always recommended. Keep traces short and, when possible, use a printed-circuit board (PCB) ground plane with surface-mount components placed as close to the device pins as possible. Place a 0.1-µF capacitor closely across the supply pins. These guidelines must be applied throughout the analog circuit to improve performance and provide benefits such as reducing the electromagnetic interference (EMI) susceptibility.

For lowest offset voltage and precision performance, circuit layout and mechanical conditions must be optimized. Avoid temperature gradients that create thermoelectric (Seebeck) effects in the thermocouple junctions formed from connecting dissimilar conductors. These thermally-generated potentials can be made to cancel by assuring they are equal on both input terminals. Other layout and design considerations include:

- Use low thermoelectric-coefficient conditions (avoid dissimilar metals).
- Thermally isolate components from power supplies or other heat sources.
- Shield operational amplifier and input circuitry from air currents, such as cooling fans.

Following these guidelines reduces the likelihood of junctions being at different temperatures, which can cause thermoelectric voltage drift of 0.1 µV/°C or higher, depending on materials used.

10.2 Layout Example

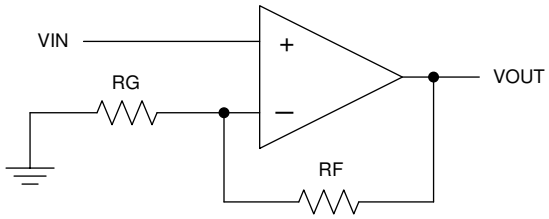

图 10-1. Schematic Representation

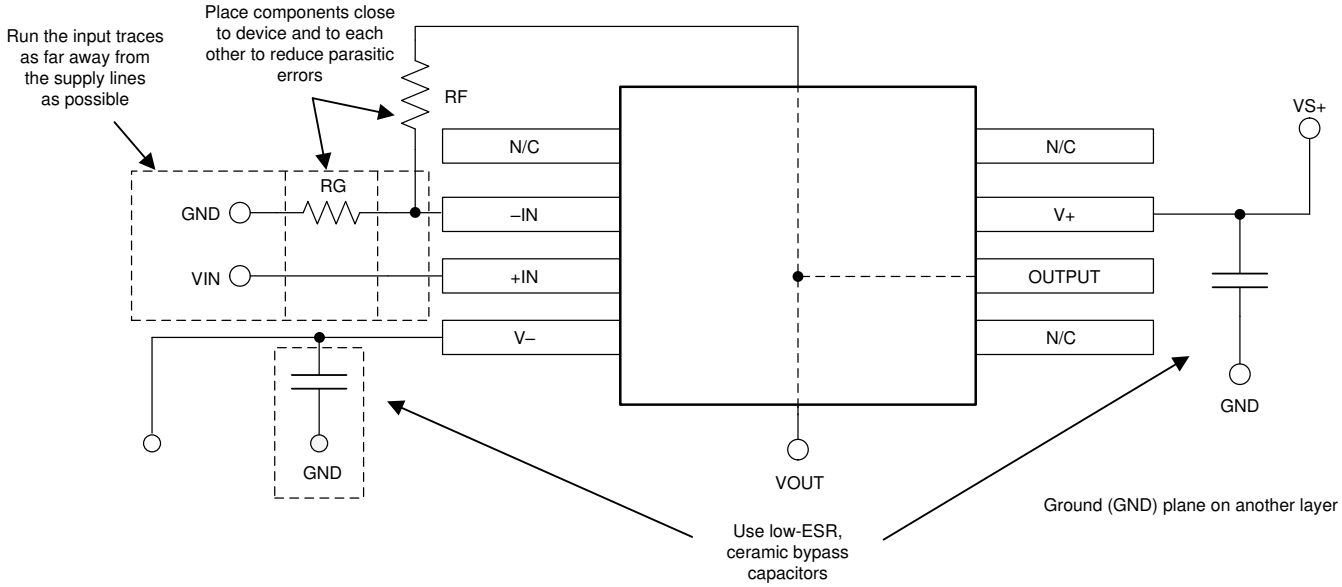

图 10-2. OPA388 Layout Example

Copyright © 2020 Texas Instruments Incorporated

11 Device and Documentation Support

11.1 Device Support

11.1.1 Development Support

11.1.1.1 TINA-TI™ (Free Software Download)

TINA-TI™ is a simple, powerful, and easy-to-use circuit simulation program based on a SPICE engine. TINA-TI ™ is a free, fully-functional version of the TINA™ software, preloaded with a library of macromodels in addition to a range of both passive and active models. TINA-TI™ provides all the conventional dc, transient, and frequency domain analysis of SPICE, as well as additional design capabilities.

Available as a free download from the Analog eLab Design Center, TINA-TI™ offers extensive post-processing capability that allows users to format results in a variety of ways. Virtual instruments offer the ability to select input waveforms and probe circuit nodes, voltages, and waveforms, creating a dynamic quick-start tool.

Note

These files require that either the TINA software (from DesignSoft™) or TINA-TI™ software be installed. Download the free TINA-TI™ software from the TINA-TI™ folder.

11.1.1.2 TI Precision Designs

The OPAx388 family is featured on TI Precision Designs, available online at www.ti.com/ww/en/analog/precision-designs/. TI Precision Designs are analog solutions created by TI’s precision analog applications experts and offer the theory of operation, component selection, simulation, complete PCB schematic and layout, bill of materials, and measured performance of many useful circuits.

11.2 Documentation Support

11.2.1 Related Documentation

For related documentation see the following:

- Texas Instruments, *Circuit board layout techniques*
- Texas Instruments, *DAC883x 16-Bit, Ultra-Low Power, Voltage-Output Digital-to-Analog Converters* data sheet

11.3 Related Links

表 11-1 lists quick access links. Categories include technical documents, support and community resources, tools and software, and quick access to sample or buy.

Table 11-1. Related Links

PARTS	PRODUCT FOLDER	SAMPLE & BUY	TECHNICAL DOCUMENTS	TOOLS & SOFTWARE	SUPPORT & COMMUNITY
OPA388	Click here	Click here	Click here	Click here	Click here
OPA2388	Click here	Click here	Click here	Click here	Click here
OPA4388	Click here	Click here	Click here	Click here	Click here

11.4 Receiving Notification of Documentation Updates

To receive notification of documentation updates, navigate to the device product folder on ti.com. In the upper right corner, click on *Alert me* to register and receive a weekly digest of any product information that has changed. For change details, review the revision history included in any revised document.

11.5 Support Resources

TI E2E™ support forums are an engineer's go-to source for fast, verified answers and design help — straight from the experts. Search existing answers or ask your own question to get the quick design help you need.

Linked content is provided "AS IS" by the respective contributors. They do not constitute TI specifications and do not necessarily reflect TI's views; see TI's Terms of Use.

11.6 Trademarks

TINA-TI™ are trademarks of TI.
TINA™ and DesignSoft™ are trademarks of DesignSoft, Inc.
TI E2E™ is a trademark of Texas Instruments.
All other trademarks are the property of their respective owners.

11.7 Electrostatic Discharge Caution

This integrated circuit can be damaged by ESD. Texas Instruments recommends that all integrated circuits be handled with appropriate precautions. Failure to observe proper handling and installation procedures can cause damage.

ESD damage can range from subtle performance degradation to complete device failure. Precision integrated circuits may be more susceptible to damage because very small parametric changes could cause the device not to meet its published specifications.

11.8 Glossary

TI Glossary This glossary lists and explains terms, acronyms, and definitions.

12 Mechanical, Packaging, and Orderable Information

The following pages include mechanical packaging and orderable information. This information is the most current data available for the designated devices. This data is subject to change without notice and revision of this document. For browser-based versions of this data sheet, refer to the left-hand navigation.

Copyright © 2020 Texas Instruments Incorporated

PACKAGING INFORMATION

Orderable Device	Status (1)	Package Type	Package Drawing	Pins	Package Qty	Eco Plan (2)	Lead finish/ Ball material (6)	MSL Peak Temp (3)	Op Temp (°C)	Device Marking (4/5)	Samples
OPA2388ID	ACTIVE	SOIC	D	8	75	RoHS & Green	SN	Level-2-260C-1 YEAR	-40 to 125	OP2388	Samples
OPA2388IDGKR	ACTIVE	VSSOP	DGK	8	2500	RoHS & Green	NIPDAUAG | SN	Level-2-260C-1 YEAR	-40 to 125	1D36	Samples
OPA2388IDGKT	ACTIVE	VSSOP	DGK	8	250	RoHS & Green	NIPDAUAG | SN	Level-2-260C-1 YEAR	-40 to 125	1D36	Samples
OPA2388IDR	ACTIVE	SOIC	D	8	2500	RoHS & Green	SN	Level-2-260C-1 YEAR	-40 to 125	OP2388	Samples
OPA388ID	ACTIVE	SOIC	D	8	75	RoHS & Green	NIPDAU	Level-2-260C-1 YEAR	-40 to 125	OPA388	Samples
OPA388IDBVR	ACTIVE	SOT-23	DBV	5	3000	RoHS & Green	NIPDAU	Level-2-260C-1 YEAR	-40 to 125	14KV	Samples
OPA388IDBVT	ACTIVE	SOT-23	DBV	5	250	RoHS & Green	NIPDAU	Level-2-260C-1 YEAR	-40 to 125	14KV	Samples
OPA388IDGKR	ACTIVE	VSSOP	DGK	8	2500	RoHS & Green	NIPDAUAG	Level-2-260C-1 YEAR	-40 to 125	14LV	Samples
OPA388IDGKT	ACTIVE	VSSOP	DGK	8	250	RoHS & Green	NIPDAUAG	Level-2-260C-1 YEAR	-40 to 125	14LV	Samples
OPA388IDR	ACTIVE	SOIC	D	8	2500	RoHS & Green	NIPDAU	Level-2-260C-1 YEAR	-40 to 125	OPA388	Samples
OPA4388ID	ACTIVE	SOIC	D	14	50	RoHS & Green	NIPDAU	Level-2-260C-1 YEAR	-40 to 125	OPA4388	Samples
OPA4388IDR	ACTIVE	SOIC	D	14	2500	RoHS & Green	NIPDAU	Level-2-260C-1 YEAR	-40 to 125	OPA4388	Samples
OPA4388IPW	ACTIVE	TSSOP	PW	14	90	RoHS & Green	NIPDAU	Level-2-260C-1 YEAR	-40 to 125	OPA4388	Samples
OPA4388IPWR	ACTIVE	TSSOP	PW	14	2000	RoHS & Green	NIPDAU	Level-2-260C-1 YEAR	-40 to 125	OPA4388	Samples

(1) The marketing status values are defined as follows:
ACTIVE: Product device recommended for new designs.
LIFEBUY: TI has announced that the device will be discontinued, and a lifetime-buy period is in effect.
NRND: Not recommended for new designs. Device is in production to support existing customers, but TI does not recommend using this part in a new design.
PREVIEW: Device has been announced but is not in production. Samples may or may not be available.
OBSOLETE: TI has discontinued the production of the device.

(2) **RoHS:** TI defines "RoHS" to mean semiconductor products that are compliant with the current EU RoHS requirements for all 10 RoHS substances, including the requirement that RoHS substance do not exceed 0.1% by weight in homogeneous materials. Where designed to be soldered at high temperatures, "RoHS" products are suitable for use in specified lead-free processes. TI may reference these types of products as "Pb-Free".

RoHS Exempt: TI defines "RoHS Exempt" to mean products that contain lead but are compliant with EU RoHS pursuant to a specific EU RoHS exemption.
Green: TI defines "Green" to mean the content of Chlorine (Cl) and Bromine (Br) based flame retardants meet JS709B low halogen requirements of <=1000ppm threshold. Antimony trioxide based flame retardants must also meet the <=1000ppm threshold requirement.

(3) MSL, Peak Temp. - The Moisture Sensitivity Level rating according to the JEDEC industry standard classifications, and peak solder temperature.

(4) There may be additional marking, which relates to the logo, the lot trace code information, or the environmental category on the device.

(5) Multiple Device Markings will be inside parentheses. Only one Device Marking contained in parentheses and separated by a "~" will appear on a device. If a line is indented then it is a continuation of the previous line and the two combined represent the entire Device Marking for that device.

(6) Lead finish/Ball material - Orderable Devices may have multiple material finish options. Finish options are separated by a vertical ruled line. Lead finish/Ball material values may wrap to two lines if the finish value exceeds the maximum column width.

Important Information and Disclaimer: The information provided on this page represents TI's knowledge and belief as of the date that it is provided. TI bases its knowledge and belief on information provided by third parties, and makes no representation or warranty as to the accuracy of such information. Efforts are underway to better integrate information from third parties. TI has taken and continues to take reasonable steps to provide representative and accurate information but may not have conducted destructive testing or chemical analysis on incoming materials and chemicals. TI and TI suppliers consider certain information to be proprietary, and thus CAS numbers and other limited information may not be available for release.

In no event shall TI's liability arising out of such information exceed the total purchase price of the TI part(s) at issue in this document sold by TI to Customer on an annual basis.

OTHER QUALIFIED VERSIONS OF OPA2388, OPA388 :

- Automotive : OPA2388-Q1, OPA388-Q1

NOTE: Qualified Version Definitions:

- Automotive - Q100 devices qualified for high-reliability automotive applications targeting zero defects

TAPE AND REEL INFORMATION

REEL DIMENSIONS

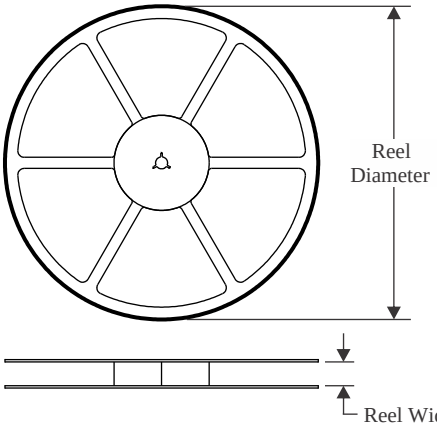

TAPE DIMENSIONS

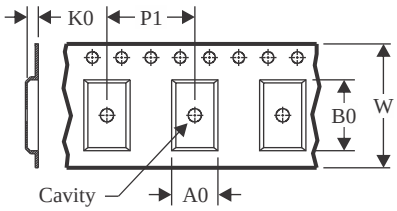

A0	Dimension designed to accommodate the component width
B0	Dimension designed to accommodate the component length
K0	Dimension designed to accommodate the component thickness
W	Overall width of the carrier tape
P1	Pitch between successive cavity centers

QUADRANT ASSIGNMENTS FOR PIN 1 ORIENTATION IN TAPE

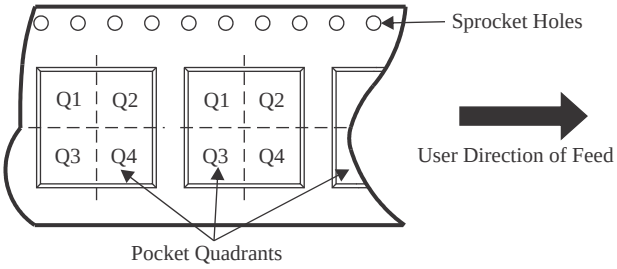

*All dimensions are nominal

Device	Package Type	Package Drawing	Pins	SPQ	Reel Diameter (mm)	Reel Width W1 (mm)	A0 (mm)	B0 (mm)	K0 (mm)	P1 (mm)	W (mm)	Pin1 Quadrant
OPA2388IDGKR	VSSOP	DGK	8	2500	330.0	12.4	5.3	3.4	1.4	8.0	12.0	Q1
OPA2388IDGKT	VSSOP	DGK	8	250	330.0	12.4	5.3	3.4	1.4	8.0	12.0	Q1
OPA2388IDR	SOIC	D	8	2500	330.0	12.8	6.4	5.2	2.1	8.0	12.0	Q1
OPA388IDBVR	SOT-23	DBV	5	3000	180.0	8.4	3.23	3.17	1.37	4.0	8.0	Q3
OPA388IDBVT	SOT-23	DBV	5	250	180.0	8.4	3.23	3.17	1.37	4.0	8.0	Q3
OPA388IDGKR	VSSOP	DGK	8	2500	330.0	12.4	5.3	3.4	1.4	8.0	12.0	Q1
OPA388IDGKT	VSSOP	DGK	8	250	330.0	12.4	5.3	3.4	1.4	8.0	12.0	Q1
OPA388IDR	SOIC	D	8	2500	330.0	12.4	6.4	5.2	2.1	8.0	12.0	Q1
OPA4388IDR	SOIC	D	14	2500	330.0	16.4	6.5	9.0	2.1	8.0	16.0	Q1
OPA4388IPWR	TSSOP	PW	14	2000	330.0	12.4	6.9	5.6	1.6	8.0	12.0	Q1

TAPE AND REEL BOX DIMENSIONS

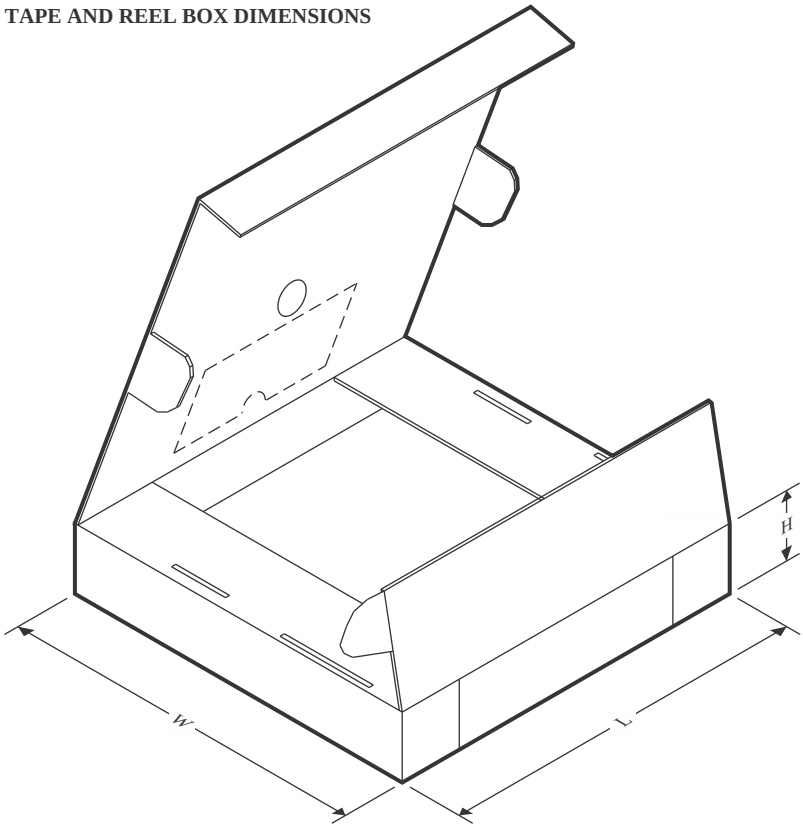

*All dimensions are nominal

Device	Package Type	Package Drawing	Pins	SPQ	Length (mm)	Width (mm)	Height (mm)
OPA2388IDGKR	VSSOP	DGK	8	2500	366.0	364.0	50.0
OPA2388IDGKT	VSSOP	DGK	8	250	366.0	364.0	50.0
OPA2388IDR	SOIC	D	8	2500	366.0	364.0	50.0
OPA388IDBVR	SOT-23	DBV	5	3000	213.0	191.0	35.0
OPA388IDBVT	SOT-23	DBV	5	250	213.0	191.0	35.0
OPA388IDGKR	VSSOP	DGK	8	2500	366.0	364.0	50.0
OPA388IDGKT	VSSOP	DGK	8	250	366.0	364.0	50.0
OPA388IDR	SOIC	D	8	2500	356.0	356.0	35.0
OPA4388IDR	SOIC	D	14	2500	356.0	356.0	35.0
OPA4388IPWR	TSSOP	PW	14	2000	356.0	356.0	35.0

TUBE

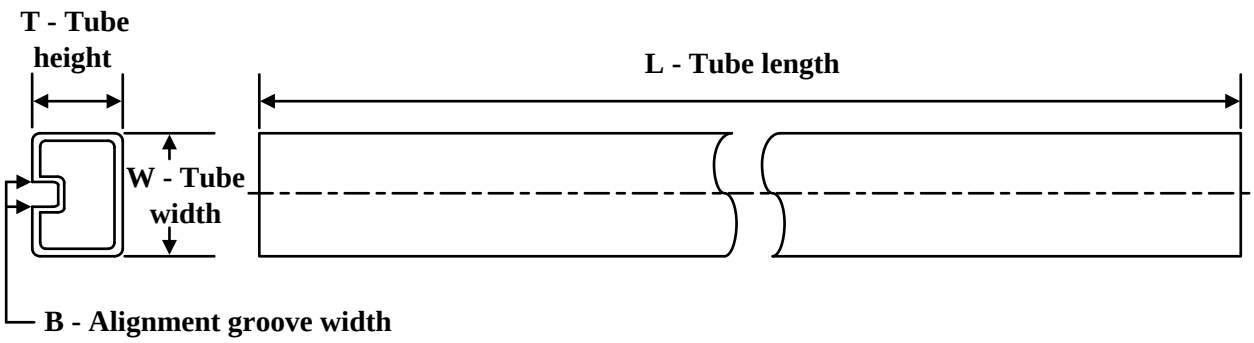

*All dimensions are nominal

Device	Package Name	Package Type	Pins	SPQ	L (mm)	W (mm)	T (µm)	B (mm)
OPA2388ID	D	SOIC	8	75	517	7.87	635	4.25
OPA388ID	D	SOIC	8	75	506.6	8	3940	4.32
OPA4388ID	D	SOIC	14	50	506.6	8	3940	4.32
OPA4388IPW	PW	TSSOP	14	90	530	10.2	3600	3.5

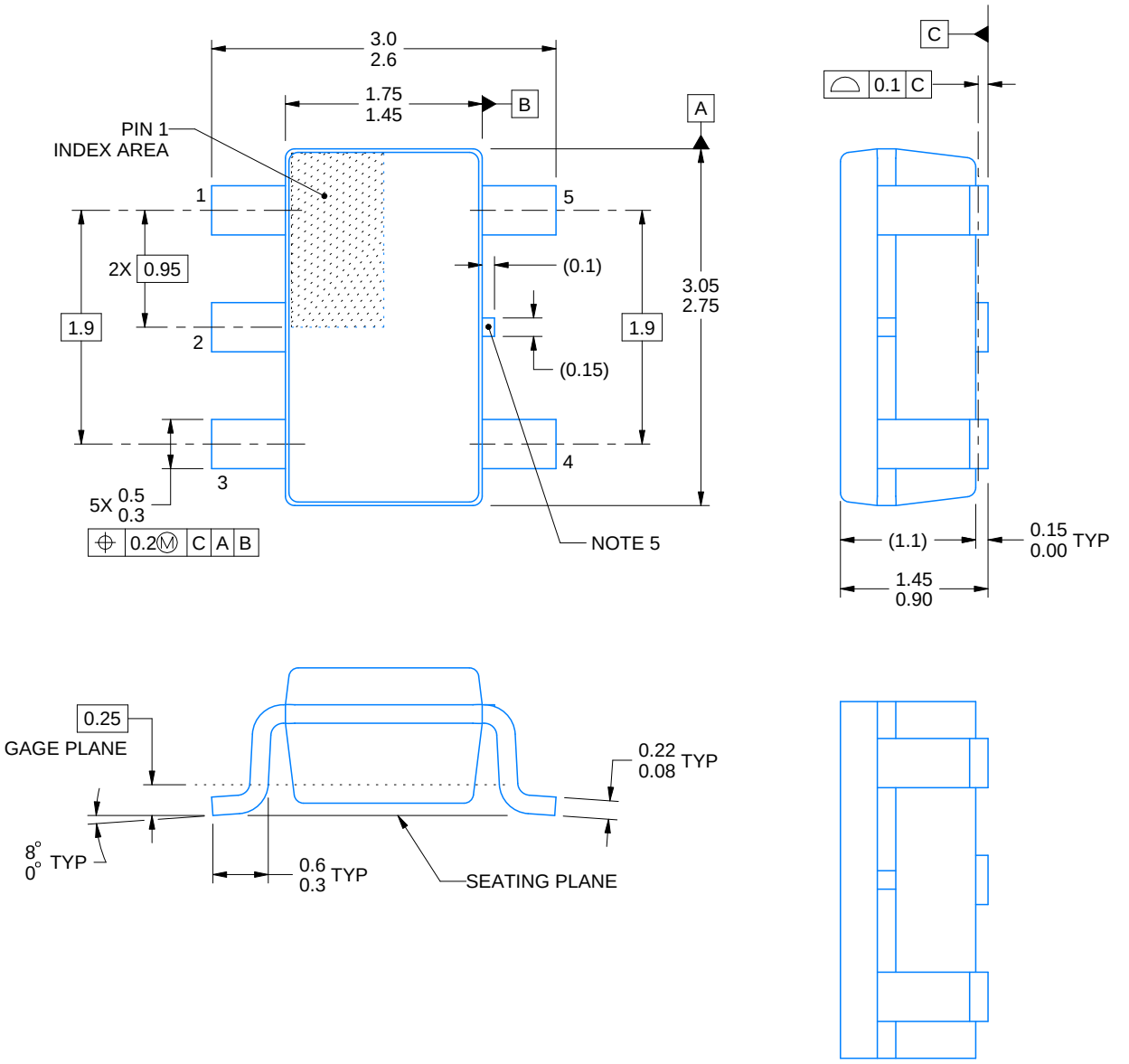

ALTERNATIVE PACKAGE SINGULATION VIEW

4214839/J 02/2024

NOTES:

1. All linear dimensions are in millimeters. Any dimensions in parenthesis are for reference only. Dimensioning and tolerancing per ASME Y14.5M.
2. This drawing is subject to change without notice.
3. Refernce JEDEC MO-178.
4. Body dimensions do not include mold flash, protrusions, or gate burrs. Mold flash, protrusions, or gate burrs shall not exceed 0.25 mm per side.
5. Support pin may differ or may not be present.

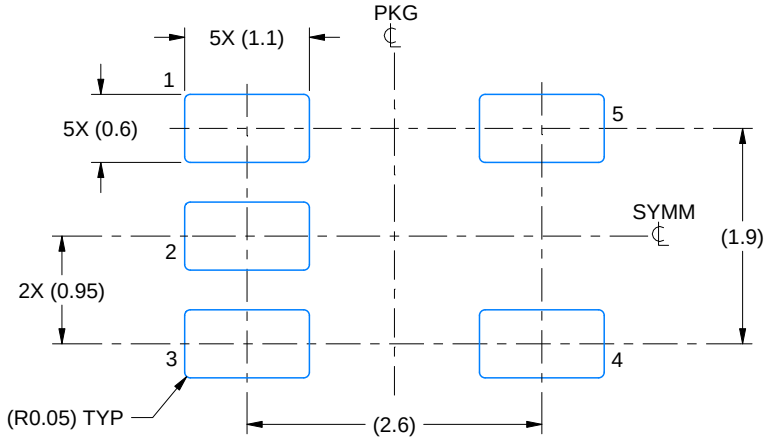

LAND PATTERN EXAMPLE
EXPOSED METAL SHOWN
SCALE:15X

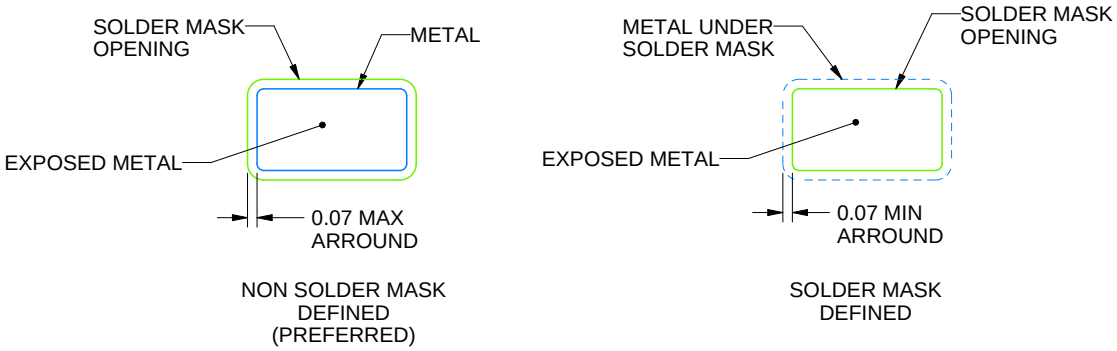

SOLDER MASK DETAILS

4214839/J 02/2024

NOTES: (continued)

6. Publication IPC-7351 may have alternate designs.
7. Solder mask tolerances between and around signal pads can vary based on board fabrication site.

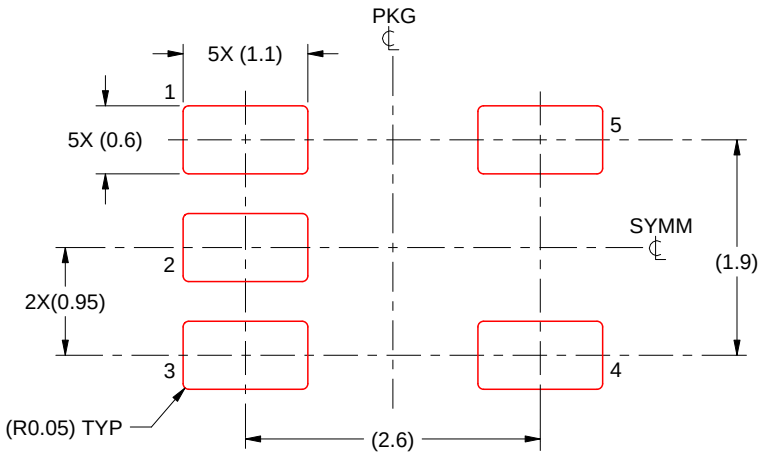

SOLDER PASTE EXAMPLE
BASED ON 0.125 mm THICK STENCIL
SCALE:15X

4214839/J 02/2024

NOTES: (continued)

8. Laser cutting apertures with trapezoidal walls and rounded corners may offer better paste release. IPC-7525 may have alternate design recommendations.
9. Board assembly site may have different recommendations for stencil design.

D (R–PDSO–G14) PLASTIC SMALL OUTLINE

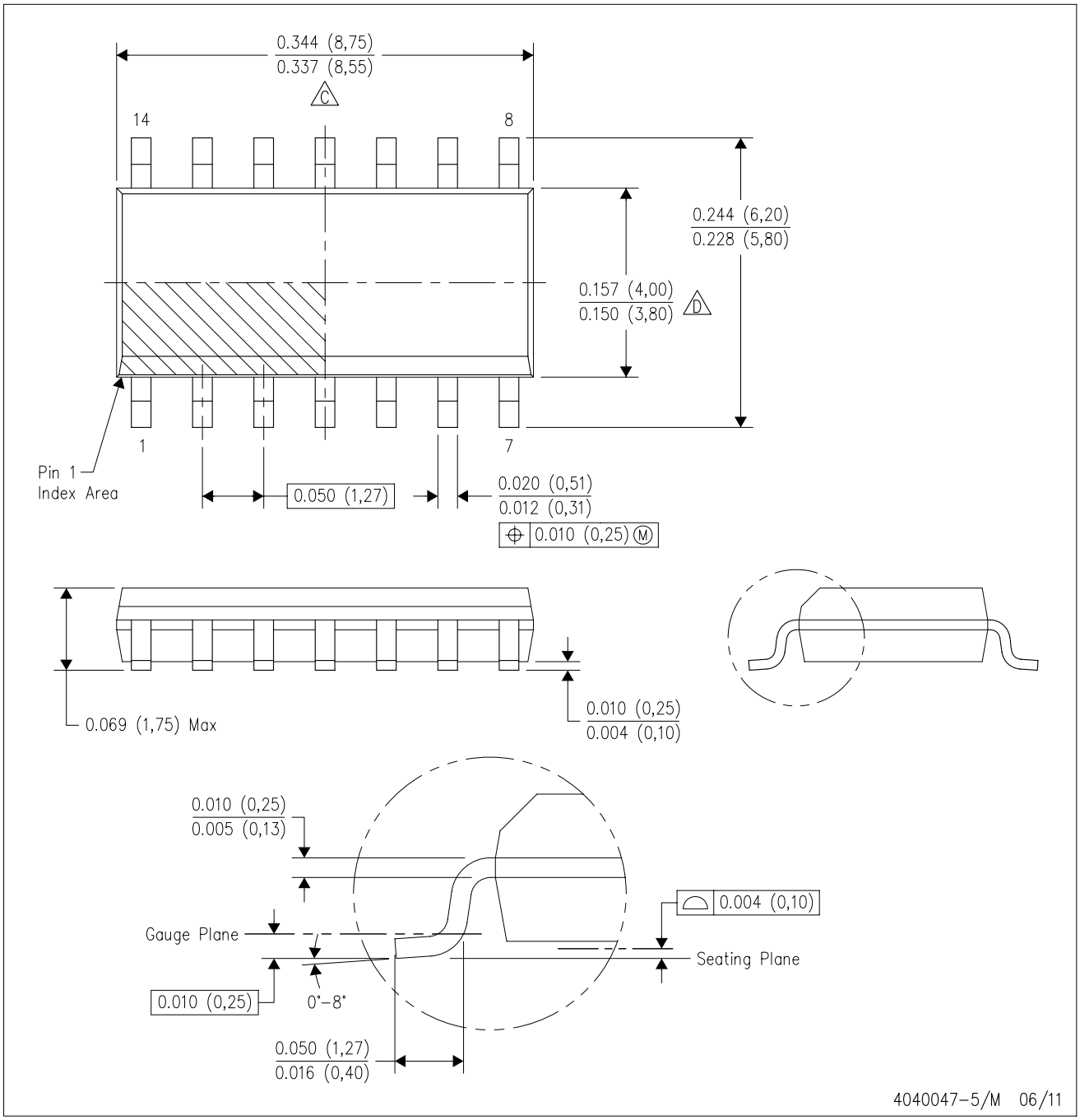

NOTES:
A. All linear dimensions are in inches (millimeters).
B. This drawing is subject to change without notice.
C. Body length does not include mold flash, protrusions, or gate burrs. Mold flash, protrusions, or gate burrs shall not exceed 0.006 (0,15) each side.
D. Body width does not include interlead flash. Interlead flash shall not exceed 0.017 (0,43) each side.
E. Reference JEDEC MS–012 variation AB.

D (R–PDSO–G14) PLASTIC SMALL OUTLINE

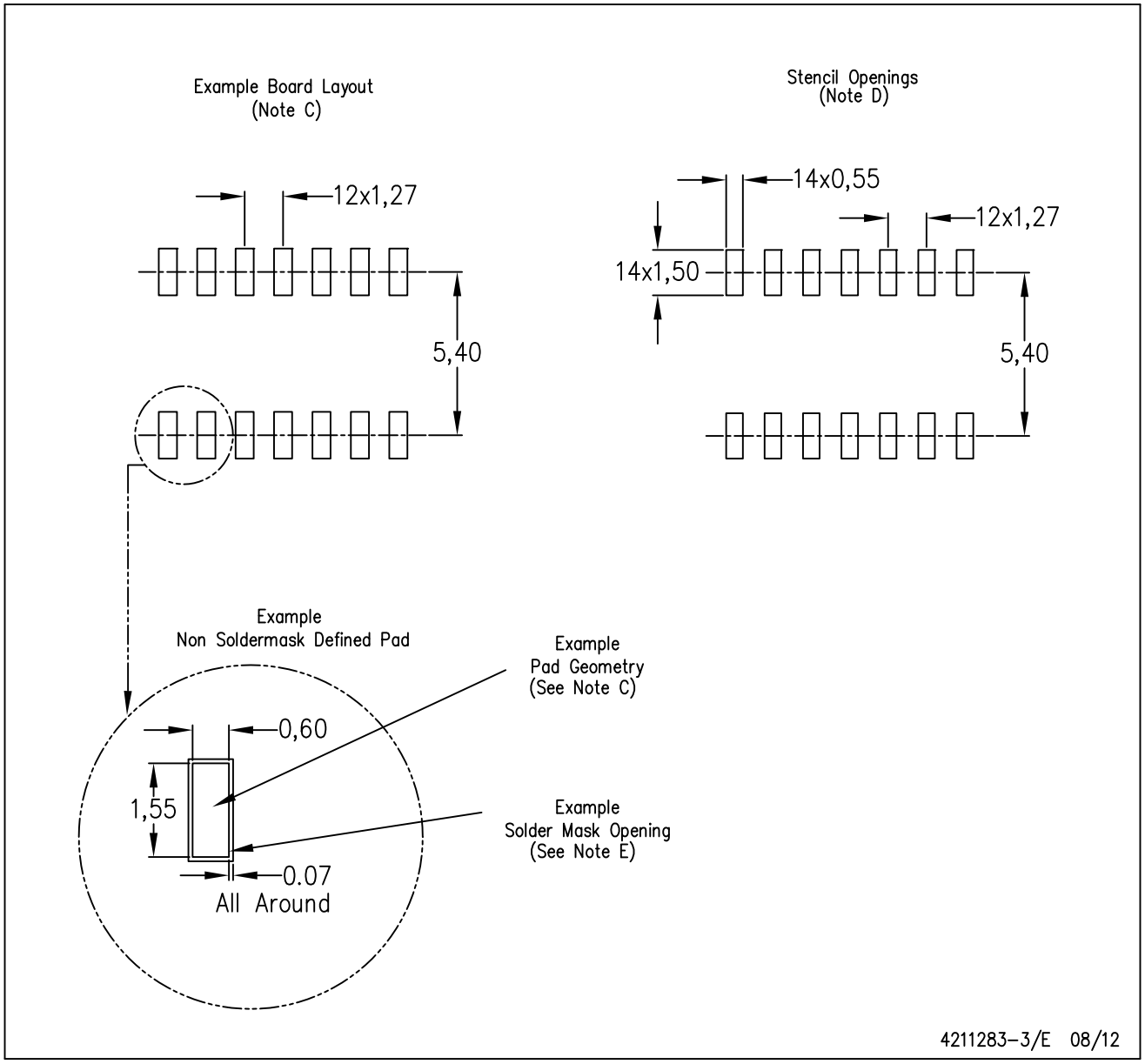

NOTES:
A. All linear dimensions are in millimeters.
B. This drawing is subject to change without notice.
C. Publication IPC–7351 is recommended for alternate designs.
D. Laser cutting apertures with trapezoidal walls and also rounding corners will offer better paste release. Customers should contact their board assembly site for stencil design recommendations. Refer to IPC–7525 for other stencil recommendations.
E. Customers should contact their board fabrication site for solder mask tolerances between and around signal pads.

PW (R–PDSO–G14) PLASTIC SMALL OUTLINE

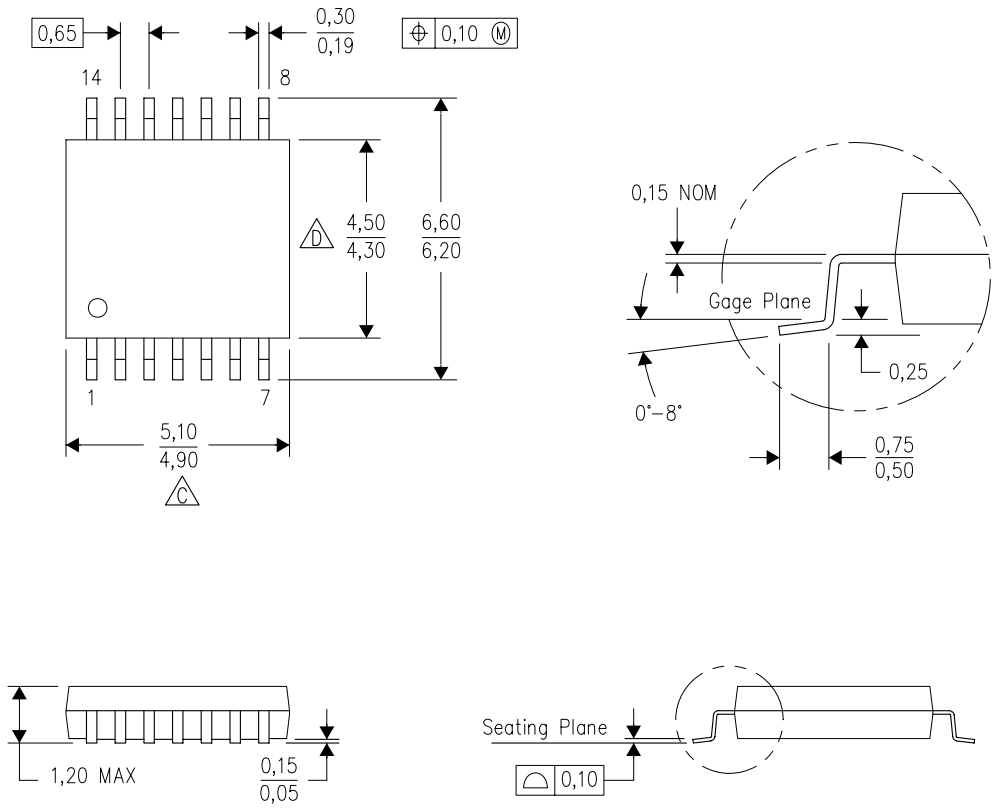

NOTES:
A. All linear dimensions are in millimeters. Dimensioning and tolerancing per ASME Y14.5M–1994.
B. This drawing is subject to change without notice.
C. Body length does not include mold flash, protrusions, or gate burrs. Mold flash, protrusions, or gate burrs shall not exceed 0,15 each side.
D. Body width does not include interlead flash. Interlead flash shall not exceed 0,25 each side.
E. Falls within JEDEC MO–153

PW (R–PDSO–G14) PLASTIC SMALL OUTLINE

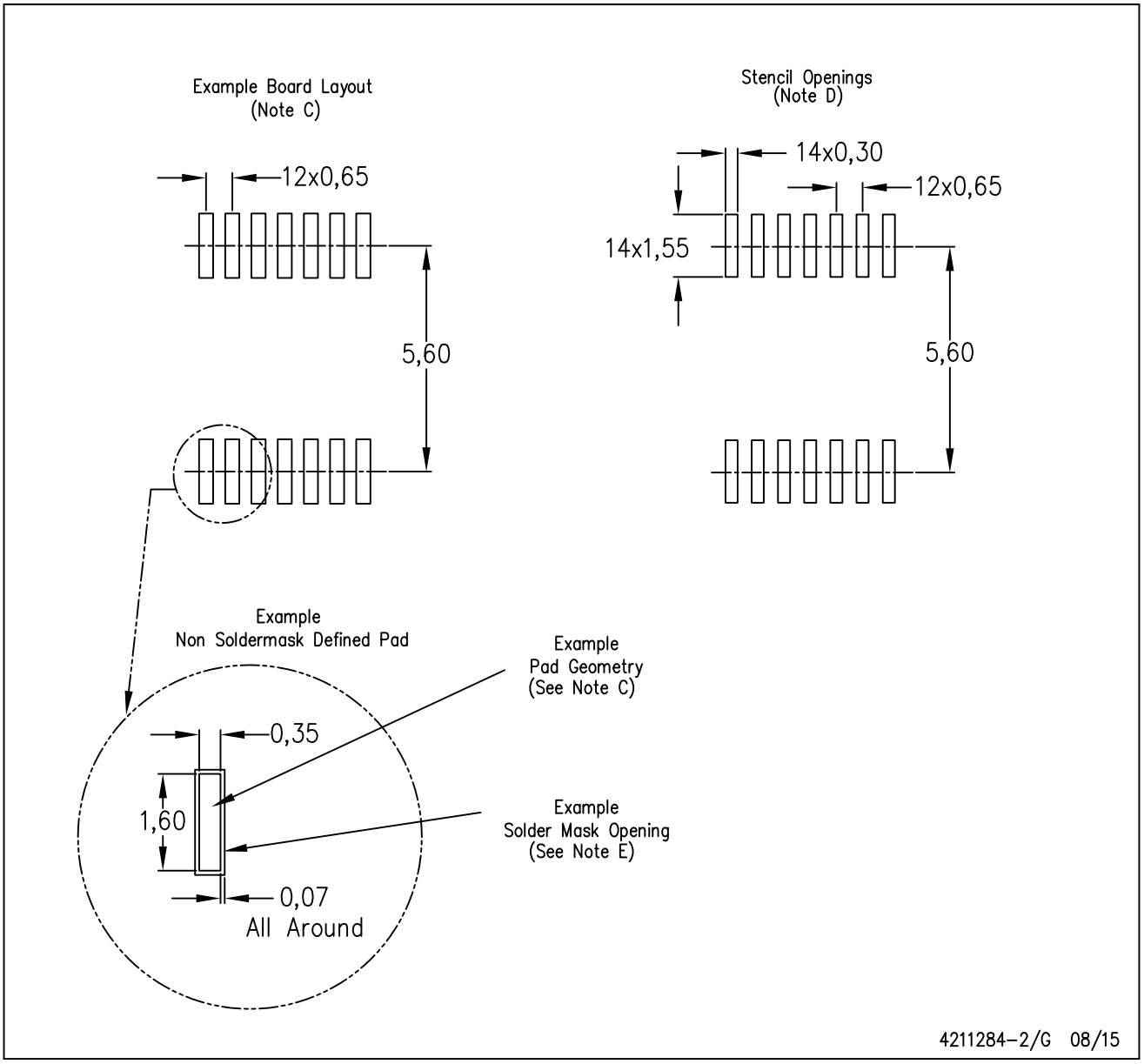

NOTES:
A. All linear dimensions are in millimeters.
B. This drawing is subject to change without notice.
C. Publication IPC–7351 is recommended for alternate designs.
D. Laser cutting apertures with trapezoidal walls and also rounding corners will offer better paste release. Customers should contact their board assembly site for stencil design recommendations. Refer to IPC–7525 for other stencil recommendations.
E. Customers should contact their board fabrication site for solder mask tolerances between and around signal pads.

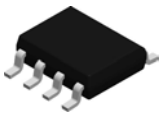

PACKAGE OUTLINE

D0008A

SOIC - 1.75 mm max height

SMALL OUTLINE INTEGRATED CIRCUIT

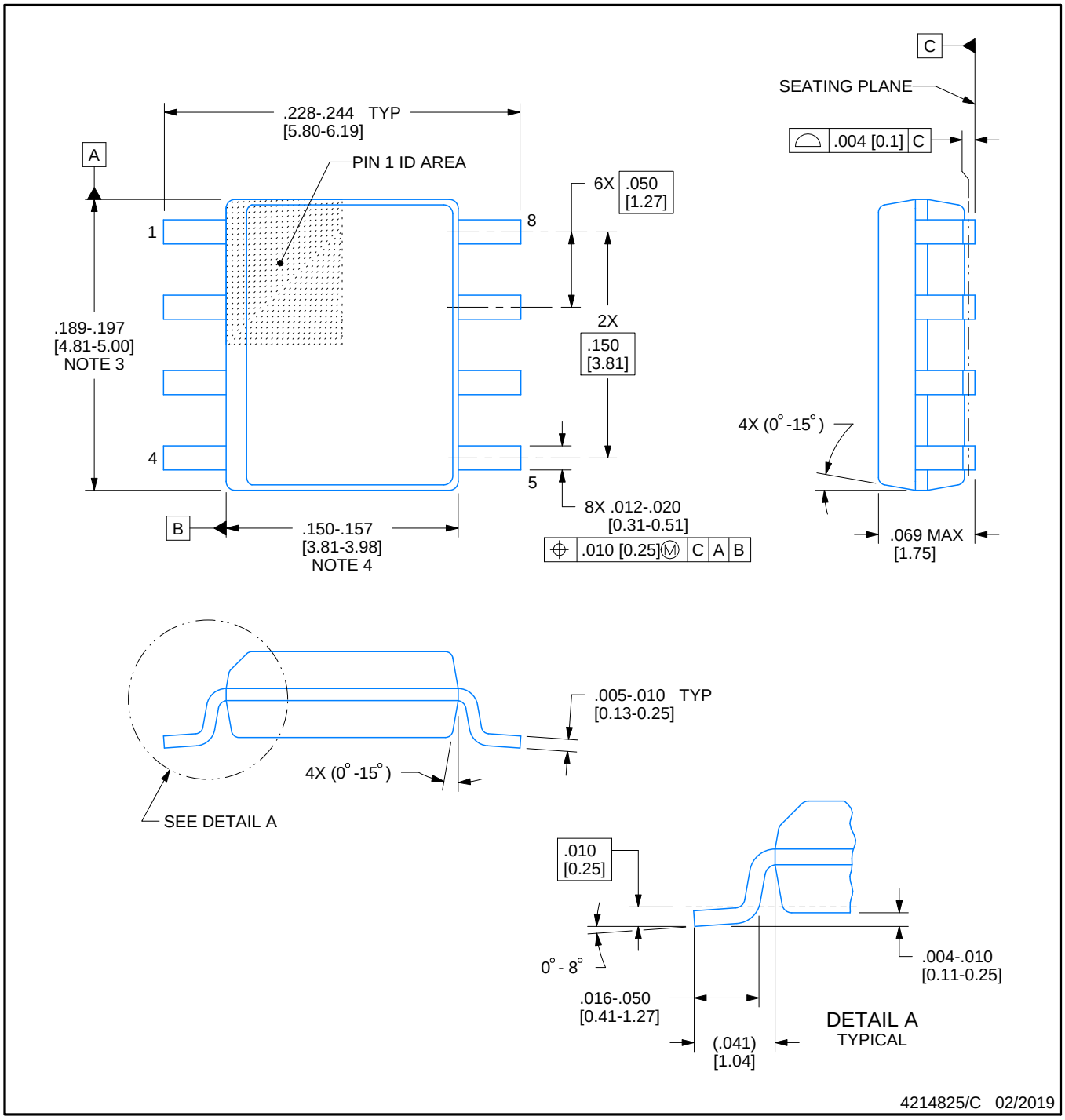

NOTES:

1. Linear dimensions are in inches [millimeters]. Dimensions in parenthesis are for reference only. Controlling dimensions are in inches. Dimensioning and tolerancing per ASME Y14.5M.
2. This drawing is subject to change without notice.
3. This dimension does not include mold flash, protrusions, or gate burrs. Mold flash, protrusions, or gate burrs shall not exceed .006 [0.15] per side.
4. This dimension does not include interlead flash.
5. Reference JEDEC registration MS-012, variation AA.

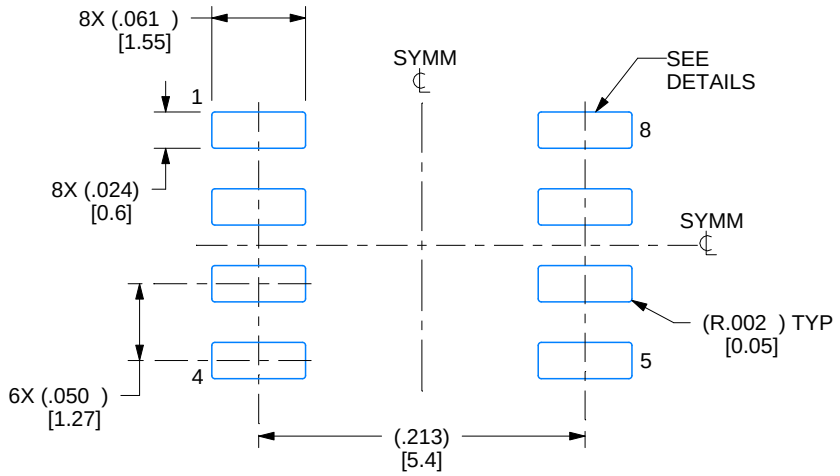

LAND PATTERN EXAMPLE
EXPOSED METAL SHOWN
SCALE:8X

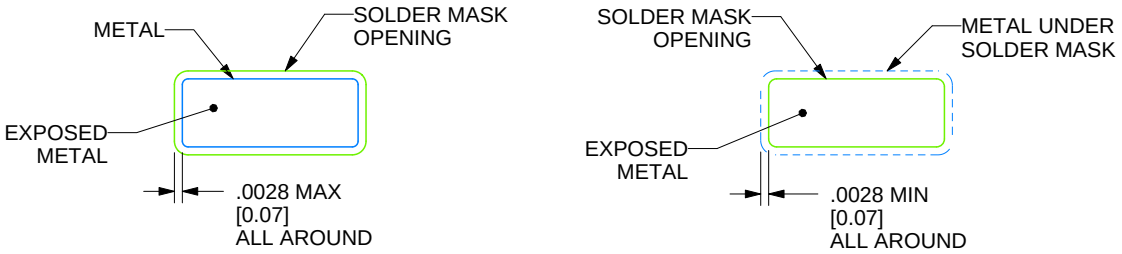

SOLDER MASK DETAILS

4214825/C 02/2019

NOTES: (continued)

6. Publication IPC-7351 may have alternate designs.
7. Solder mask tolerances between and around signal pads can vary based on board fabrication site.

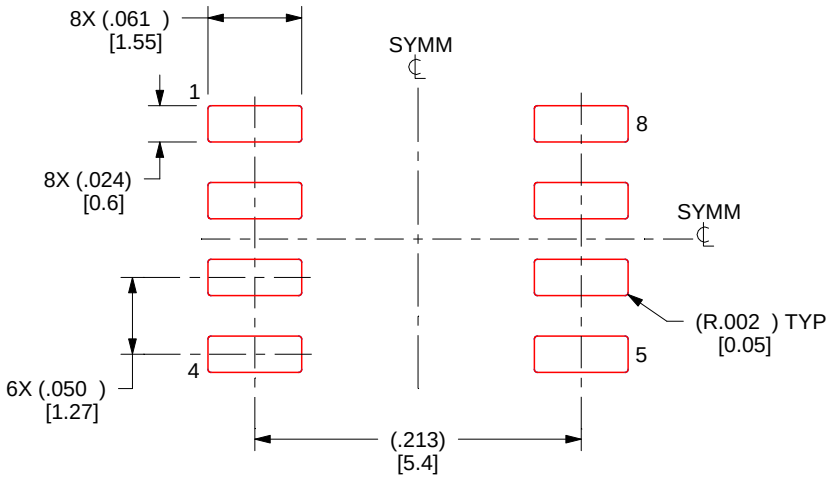

SOLDER PASTE EXAMPLE
BASED ON .005 INCH [0.125 MM] THICK STENCIL
SCALE:8X

4214825/C 02/2019

NOTES: (continued)

8. Laser cutting apertures with trapezoidal walls and rounded corners may offer better paste release. IPC-7525 may have alternate design recommendations.
9. Board assembly site may have different recommendations for stencil design.

DGK (S–PDSO–G8) PLASTIC SMALL–OUTLINE PACKAGE

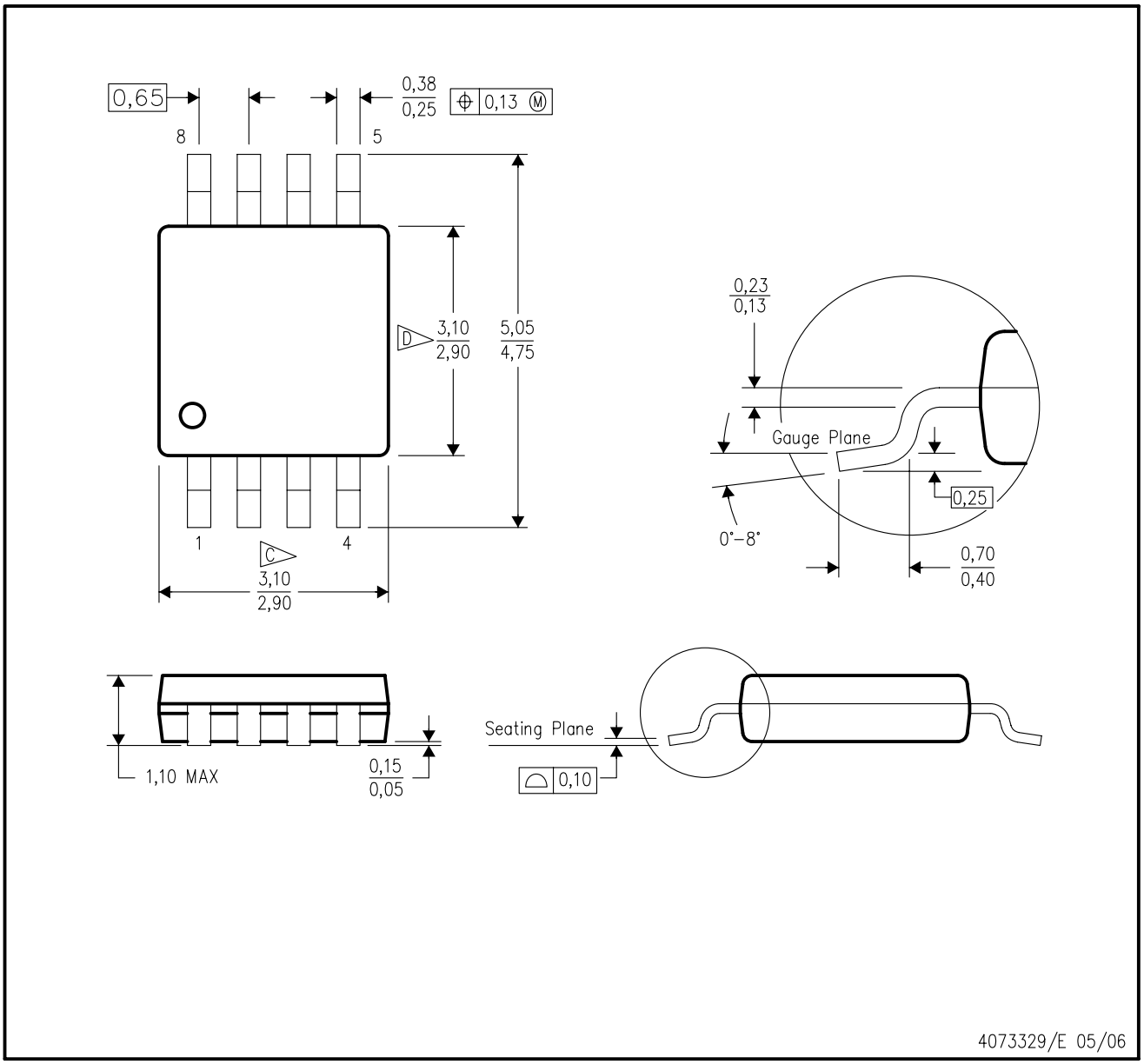

NOTES:
A. All linear dimensions are in millimeters.
B. This drawing is subject to change without notice.
C. Body length does not include mold flash, protrusions, or gate burrs. Mold flash, protrusions, or gate burrs shall not exceed 0.15 per end.
D. Body width does not include interlead flash. Interlead flash shall not exceed 0.50 per side.
E. Falls within JEDEC MO–187 variation AA, except interlead flash.

DGK (S–PDSO–G8) PLASTIC SMALL OUTLINE PACKAGE

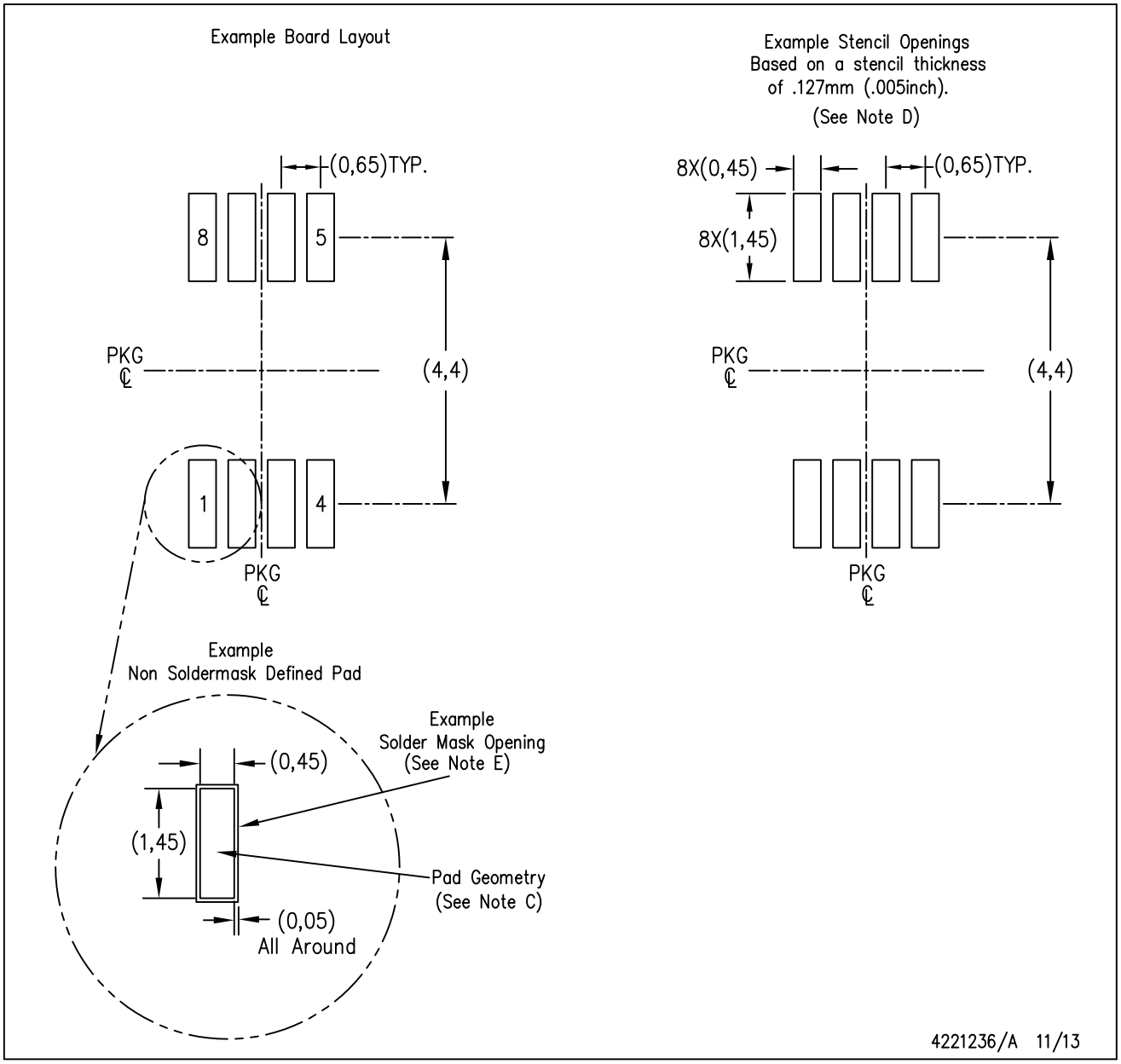

NOTES:
A. All linear dimensions are in millimeters.
B. This drawing is subject to change without notice.
C. Publication IPC–7351 is recommended for alternate designs.
D. Laser cutting apertures with trapezoidal walls and also rounding corners will offer better paste release. Customers should contact their board assembly site for stencil design recommendations. Refer to IPC–7525 for other stencil recommendations.
E. Customers should contact their board fabrication site for solder mask tolerances between and around signal pads.

重要声明和免责声明

TI“按原样”提供技术和可靠性数据（包括数据表）、设计资源（包括参考设计）、应用或其他设计建议、网络工具、安全信息和其他资源，不保证没有瑕疵且不做出任何明示或暗示的担保，包括但不限于对适销性、某特定用途方面的适用性或不侵犯任何第三方知识产权的暗示担保。

这些资源可供使用 TI 产品进行设计的熟练开发人员使用。您将自行承担以下全部责任：(1) 针对您的应用选择合适的 TI 产品，(2) 设计、验证并测试您的应用，(3) 确保您的应用满足相应标准以及任何其他功能安全、信息安全、监管或其他要求。

这些资源如有变更，恕不另行通知。TI 授权您仅可将这些资源用于研发本资源所述的 TI 产品的应用。严禁对这些资源进行其他复制或展示。您无权使用任何其他 TI 知识产权或任何第三方知识产权。您应全额赔偿因在这些资源的使用中对 TI 及其代表造成的任何索赔、损害、成本、损失和债务，TI 对此概不负责。

TI 提供的产品受 TI 的销售条款或 ti.com 上其他适用条款/TI 产品随附的其他适用条款的约束。TI 提供这些资源并不会扩展或以其他方式更改 TI 针对 TI 产品发布的适用的担保或担保免责声明。

TI 反对并拒绝您可能提出的任何其他或不同的条款。

邮寄地址：Texas Instruments, Post Office Box 655303, Dallas, Texas 75265
Copyright © 2024，德州仪器 (TI) 公司