AM26LS31x 四路差动线路驱动器

1 特性

- 符合或超出 ANSI TIA/EIA-422-B 和 ITU 的要求
- 采用 5V 单电源供电
- TTL 兼容
- 互补输出
- 断电时具有高输出阻抗
- 互补输出使能输入
- 可用的已通过 MIL-PRF-38535 认证的选项 (M)：除非另有说明，否则所有参数均经过测试。对于所有其他产品，生产流程不一定包含对所有参数的测试。

2 应用

- 电机编码器
- 现场发送器：压力传感器和温度传感器
- 军用和航空电子成像
- 采用 Modbus 的温度传感器或控制器

3 说明

AM26LS31 系列器件是四路互补输出线路驱动器，可满足 ANSI TIA/EIA-422-B 和 ITU（原 CCITT）建议 V.11 的要求。三态输出可提供用于驱动双绞线或平行双线传输线路等平衡线路的高电流，并在断电情况下处于高阻抗状态。四个驱动器均具有使能功能，该功能提供了两种可选输入：高电平有效使能和低电平有效使能（G、$\overline{G}$）输入。低功耗肖特基电路可在不牺牲速度的情况下降低功耗。

器件信息(1)

器件编号	封装	封装尺寸（标称值）
AM26LS31MFK	LCCC (20)	8.89mm x 8.89mm
AM26LS31MJ	CDIP (16)	19.60mm × 6.92mm
AM26LS31MW	CFP (16)	10.30mm × 6.73mm
AM26LS31CD	SOIC (16)	9.90mm x 3.91mm
AM26LS31CDB	SSOP (16)	6.20mm x 5.30mm
AM26LS31CN	PDIP (16)	19.30mm x 6.35mm
AM26LS31xNS	SO (16)	10.30mm × 5.30mm

(1) 如需了解所有可用封装，请参阅产品说明书末尾的可订购产品附录。

原理图（每个驱动器）

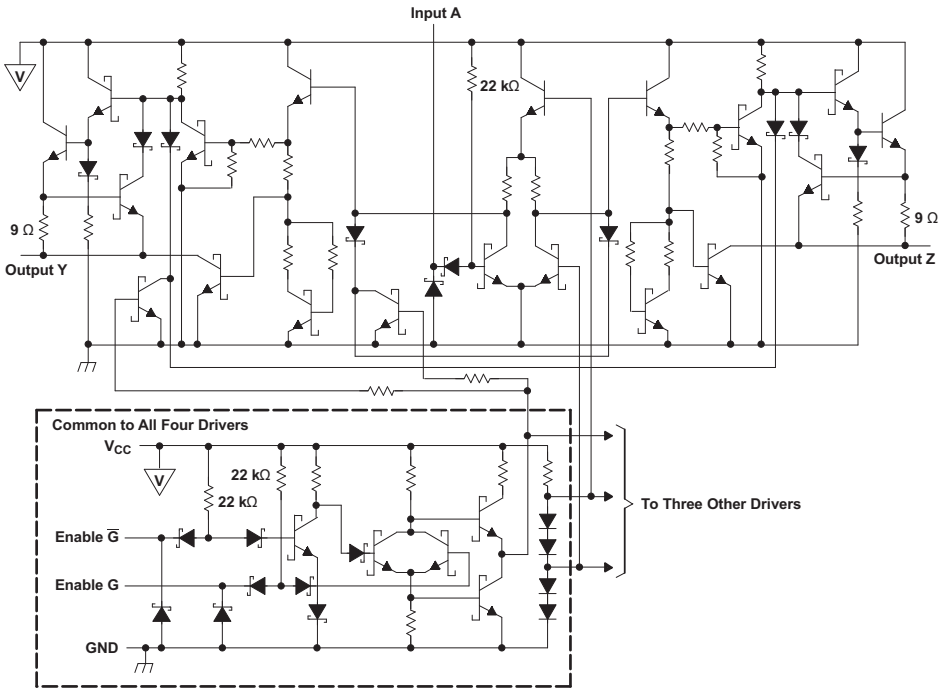

All resistor values are nominal.

Copyright © 2016, Texas Instruments Incorporated

本文档旨在为方便起见，提供有关 TI 产品中文版本的信息，以确认产品的概要。 有关适用的官方英文版本的最新信息，请访问 www.ti.com，其内容始终优先。 TI 不保证翻译的准确性和有效性。 在实际设计之前，请务必参考最新版本的英文版本。

目录

1 特性 ... 1
2 应用 ... 1
3 说明 ... 1
4 修订历史记录 ... 2
5 **Pin Configuration and Functions** ... 3
6 **Specifications** ... 4
6.1 Absolute Maximum Ratings ... 4
6.2 ESD Ratings ... 4
6.3 Recommended Operating Conditions ... 4
6.4 Thermal Information ... 4
6.5 Electrical Characteristics ... 5
6.6 Switching Characteristics – AM26LS31 ... 5
6.7 Switching Characteristics – AM26LS31M ... 5
6.8 Typical Characteristics ... 6
7 **Parameter Measurement Information** ... 8
8 **Detailed Description** ... 9
8.1 Overview ... 9
8.2 Functional Block Diagram ... 9
8.3 Feature Description ... 9
8.4 Device Functional Modes ... 10
9 **Application and Implementation** ... 11
9.1 Application Information ... 11
9.2 Typical Application ... 11
10 **Power Supply Recommendations** ... 13
11 **Layout** ... 13
11.1 Layout Guidelines ... 13
11.2 Layout Example ... 13
12 器件和文档支持 ... 14
12.1 文档支持 ... 14
12.2 相关链接 ... 14
12.3 接收文档更新通知 ... 14
12.4 社区资源 ... 14
12.5 商标 ... 14
12.6 静电放电警告 ... 14
12.7 术语表 ... 14
13 机械、封装和可订购信息 ... 14

4 修订历史记录

注：之前版本的页码可能与当前版本有所不同。

Changes from Revision K (July 2016) to Revision L — **Page**

- Changed VCC pin number From: 8 To: 16 in the *Pin Functions* table ... 3
- Changed GND pin number From: 16 To: 8 in the *Pin Functions* table ... 3

Changes from Revision J (January 2014) to Revision K — **Page**

- 添加了*应用* 部分、*器件信息* 表、*ESD 额定值* 表、*特性 说明* 部分、*器件功能模式*、*应用和实施* 部分、*电源建议* 部分、*布局* 部分、*器件和文档支持* 部分以及*机械、封装和可订购信息* 部分。 ... 1
- Split up *Switching Characteristics* table into two tables specified for each part ... 5

Changes from Revision I (February 2006) to Revision J — **Page**

- 将文档更新成了新的 TI 产品说明书格式 - 无规格变化。 ... 1
- 删除了*订购信息* 表。 ... 1
- 更新了 特性的链接。 ... 1
- 已添加 “器件和文档支持”部分。 ... 14

Copyright © 1979–2018, Texas Instruments Incorporated

5 Pin Configuration and Functions

D, DB, N , NS, J, or W Package
SOIC, SSOP, PDIP, SO, CDIP, or CFP
Top View

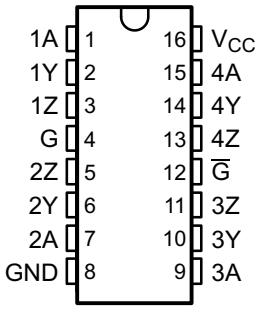

FK Package
20-Pin LCCC
Top View

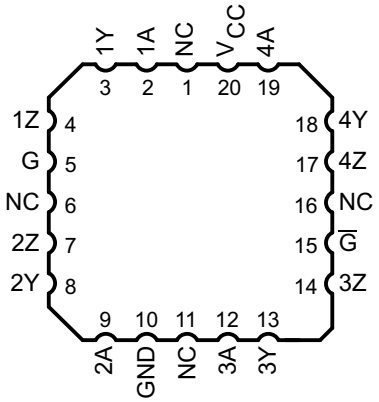

Pin Functions

PIN			I/O	DESCRIPTION
NAME	SOIC, SSOP, PDIP, SO, CDIP, or CFP	LCCC		
1A	1	2	I	Logic Data Input to RS422 Driver number 1
1Y	2	3	O	RS-422 Data Line (Driver 1)
1Z	3	4	O	RS-422 Data Line (Driver 1)
G	4	5	I	Driver Enable (active high)
$\overline{G}$	12	15	I	Driver Enable (active Low)
2A	7	9	I	Logic Data Input to RS422 Driver number 2
2Y	6	8	O	RS-422 Data Line (Driver 2)
2Z	5	7	O	RS-422 Data Line (Driver 2)
3A	9	12	I	Logic Data Input to RS422 Driver number 3
3Y	10	13	O	RS-422 Data Line (Driver 3)
3Z	11	14	O	RS-422 Data Line (Driver 3)
4A	15	19	I	Logic Data Input to RS422 Driver number 4
4Y	14	18	O	RS-422 Data Line (Driver 4)
4Z	13	17	O	RS-422 Data Line (Driver 4)
VCC	16	20	–	Power Input. Connect to 5-V Power Source.
GND	8	10	–	Device Ground Pin

Copyright © 1979–2018, Texas Instruments Incorporated

6 Specifications

6.1 Absolute Maximum Ratings

over operating free-air temperature range (unless otherwise noted)[1]

			MIN	MAX	UNIT
V_{CC}	Supply voltage[2]			7	V
V_I	Input voltage			7	V
	Output off-state voltage			5.5	V
	Lead temperature 1,6 mm (1/16 in) from case for 10 s			260	°C
	Lead temperature 1,6 mm (1/16 in) from case for 60 s	J package		300	°C
T_{stg}	Storage temperature		–65	150	°C

(1) Stresses beyond those listed under *Absolute Maximum Ratings* may cause permanent damage to the device. These are stress ratings only, and functional operation of the device at these or any other conditions beyond those indicated under *Recommended Operating Conditions* is not implied. Exposure to absolute-maximum-rated conditions for extended periods may affect device reliability.
(2) All voltage values, except differential output voltage V_{OD}, are with respect to network GND.

6.2 ESD Ratings

			VALUE	UNIT
$V_{(ESD)}$	Electrostatic discharge	Human-body model (HBM), per ANSI/ESDA/JEDEC JS-001[1]	±2000	V
		Charged-device model (CDM), per JEDEC specification JESD22-C101[2]	±1000	

(1) JEDEC document JEP155 states that 500-V HBM allows safe manufacturing with a standard ESD control process.
(2) JEDEC document JEP157 states that 250-V CDM allows safe manufacturing with a standard ESD control process.

6.3 Recommended Operating Conditions

			MIN	NOM	MAX	UNIT
V_{CC}	Supply voltage	AM26LS31C	4.75	5	5.25	V
		AM26LS31M	4.5	5	5.5	
V_{IH}	High-level input voltage		2			V
V_{IL}	Low-level input voltage				0.8	V
I_{OH}	High-level output current				–20	mA
I_{OL}	Low-level output current				20	mA
T_A	Operating free-air temperature	AM26LS31C	0		70	°C
		AM26LS31I	–40		85	
		AM26LS31M	–55		125	

6.4 Thermal Information

THERMAL METRIC[1]		AM26LS31x				UNIT
		D (SOIC)	DB (SSOP)	N (PDIP)	NS (SO)	
		16 PINS	16 PINS	16 PINS	16 PINS	
$R_{\theta JA}$	Junction-to-ambient thermal resistance[2]	73	82	67	64	°C/W
$R_{\theta JC(top)}$	Junction-to-case (top) thermal resistance	38.1	–	–	32.6	°C/W
$R_{\theta JB}$	Junction-to-board thermal resistance	34.7	–	–	36.8	°C/W
ψ_{JT}	Junction-to-top characterization parameter	7.1	–	–	4.2	°C/W
ψ_{JB}	Junction-to-board characterization parameter	34.4	–	–	36.5	°C/W

(1) For more information about traditional and new thermal metrics, see the *Semiconductor and IC Package Thermal Metrics* application report.
(2) The package thermal impedance is calculated in accordance with JESD 51-7.

Copyright © 1979–2018, Texas Instruments Incorporated

6.5 Electrical Characteristics

over operating free-air temperature range (unless otherwise noted)(1)

PARAMETER		TEST CONDITIONS		MIN	TYP(2)	MAX	UNIT
V_{IK}	Input clamp voltage	V_{CC} = MIN, I_I = –18 mA				–1.5	V
V_{OH}	High-level output voltage	V_{CC} = MIN, I_{OH} = –20 mA		2.5			V
V_{OL}	Low-level output voltage	V_{CC} = MIN, I_{OL} = 20 mA				0.5	V
I_{OZ}	Off-state (high-impedance-state) output current	V_{CC} = MIN,	V_O = 0.5 V			–20	μA
			V_O = 2.5 V			20	
I_I	Input current at maximum input voltage	V_{CC} = MAX, V_I = 7 V				0.1	mA
I_{IH}	High-level input current	V_{CC} = MAX, V_I = 2.7 V				20	μA
I_{IL}	Low-level input current	V_{CC} = MAX, V_I = 0.4 V				–0.36	mA
I_{OS}	Short-circuit output current(3)	V_{CC} = MAX		–30		–150	mA
I_{CC}	Supply current	V_{CC} = MAX, all outputs disabled			32	80	mA

(1) For C-suffix devices, V_{CC} min = 4.75 V and V_{CC} max = 5.25 V. For M-suffix devices, V_{CC} min = 4.5 V and V_{CC} max = 5.5 V.
(2) All typical values are at V_{CC} = 5 V and T_A = 25°C.
(3) Not more than one output should be shorted at a time, and duration of the short circuit should not exceed one second.

6.6 Switching Characteristics – AM26LS31

T_A = 25°C, V_{CC} = 5 V (see Figure 11)

PARAMETER		TEST CONDITIONS		MIN	TYP	MAX	UNIT
t_{PLH}	Propagation delay time, low- to high-level output	C_L = 30 pF, S1 and S2 open			14	20	ns
t_{PHL}	Propagation delay time, high- to low-level output				14	20	
t_{PZH}	Output enable time to high level	C_L = 30 pF	R_L = 75 Ω		25	40	ns
t_{PZL}	Output enable time to low level		R_L = 180 Ω		37	45	
t_{PHZ}	Output disable time from high level	C_L = 10 pF, S1 and S2 closed			21	30	ns
t_{PLZ}	Output disable time from low level				23	35	
t_{SKEW}	Output-to-output skew	C_L = 30 pF, S1 and S2 open			1	6	ns

6.7 Switching Characteristics – AM26LS31M

T_A = 25°C, V_{CC} = 5 V (see Figure 11)

PARAMETER		TEST CONDITIONS		MIN	MAX	UNIT
t_{PLH}	Propagation delay time, low- to high-level output	C_L = 30 pF, S1 and S2 open			30	ns
t_{PHL}	Propagation delay time, high- to low-level output				30	
t_{PZH}	Output enable time to high level	C_L = 30 pF	R_L = 75 Ω		60	ns
t_{PZL}	Output enable time to low level		R_L = 180 Ω		68	
t_{PHZ}	Output disable time from high level	C_L = 10 pF, S1 and S2 closed			45	ns
t_{PLZ}	Output disable time from low level				53	
t_{SKEW}	Output-to-output skew	C_L = 30 pF, S1 and S2 open			9	ns

Copyright © 1979–2018, Texas Instruments Incorporated

6.8 Typical Characteristics

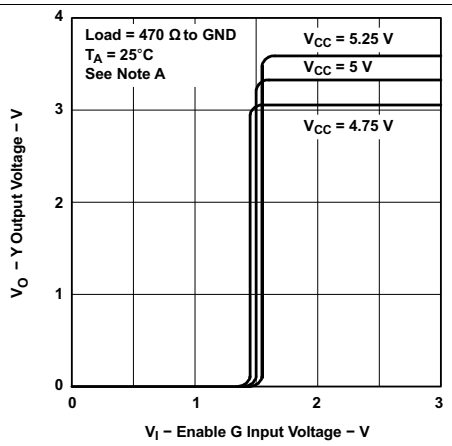

A. The A input is connected to V_{CC} during testing of the Y outputs and to ground during testing of the Z outputs.

Figure 1. Output Voltage vs Enable G Input Voltage

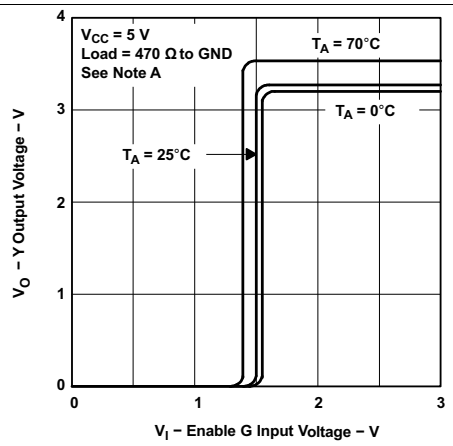

A. The A input is connected to V_{CC} during testing of the Y outputs and to ground during testing of the Z outputs.

Figure 2. Output Voltage vs Enable G Input Voltage

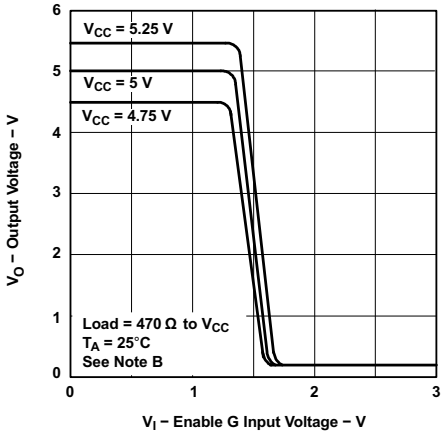

B. The A input is connected to ground during testing of the Y outputs and to V_{CC} during testing of the Z outputs.

Figure 3. Output Voltage vs Enable G Input Voltage

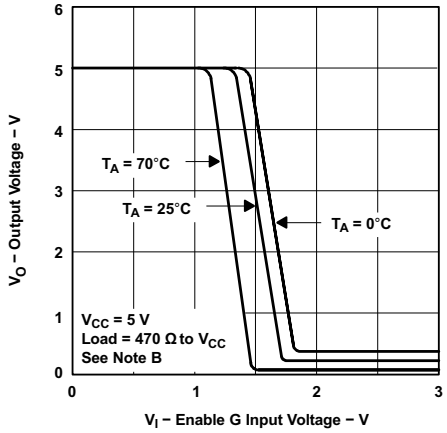

B. The A input is connected to ground during testing of the Y outputs and to V_{CC} during testing of the Z outputs.

Figure 4. Output Voltage vs Enable G Input Voltage

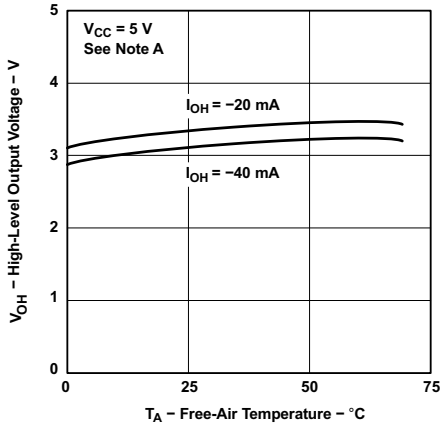

A. The A input is connected to V_{CC} during testing of the Y outputs and to ground during testing of the Z outputs.

Figure 5. High-Level Output Voltage vs Free-Air Temperature

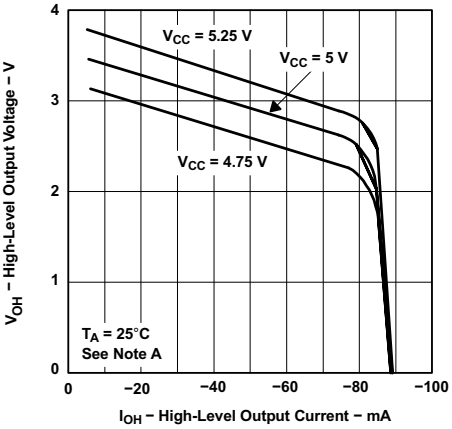

A. The A input is connected to V_{CC} during testing of the Y outputs and to ground during testing of the Z outputs.

Figure 6. High-Level Output Voltage vs High-Level Output Current

Copyright © 1979–2018, Texas Instruments Incorporated

Typical Characteristics (continued)

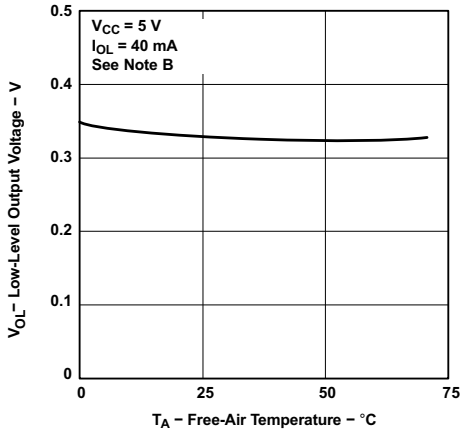

B. The A input is connected to ground during testing of the Y outputs and to V_{CC} during testing of the Z outputs.

Figure 7. Low-Level Output Voltage vs Free-Air Temperature

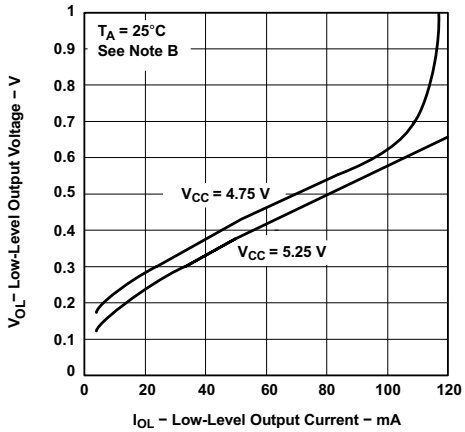

B. The A input is connected to ground during testing of the Y outputs and to V_{CC} during testing of the Z outputs.

Figure 8. Low-Level Output Voltage vs Low-Level Output Current

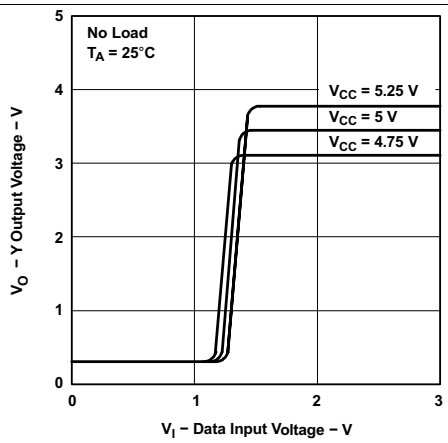

Figure 9. Y Output Voltage vs Data Input Voltage

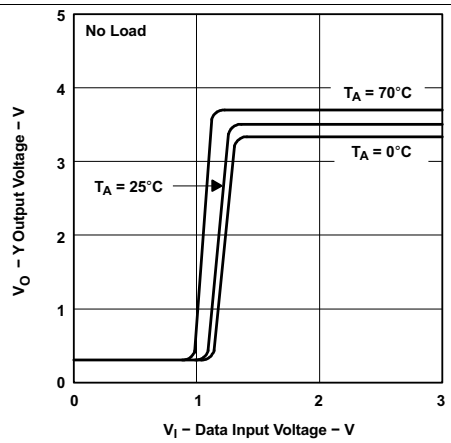

Figure 10. Y Output Voltage vs Data Input Voltage

7 Parameter Measurement Information

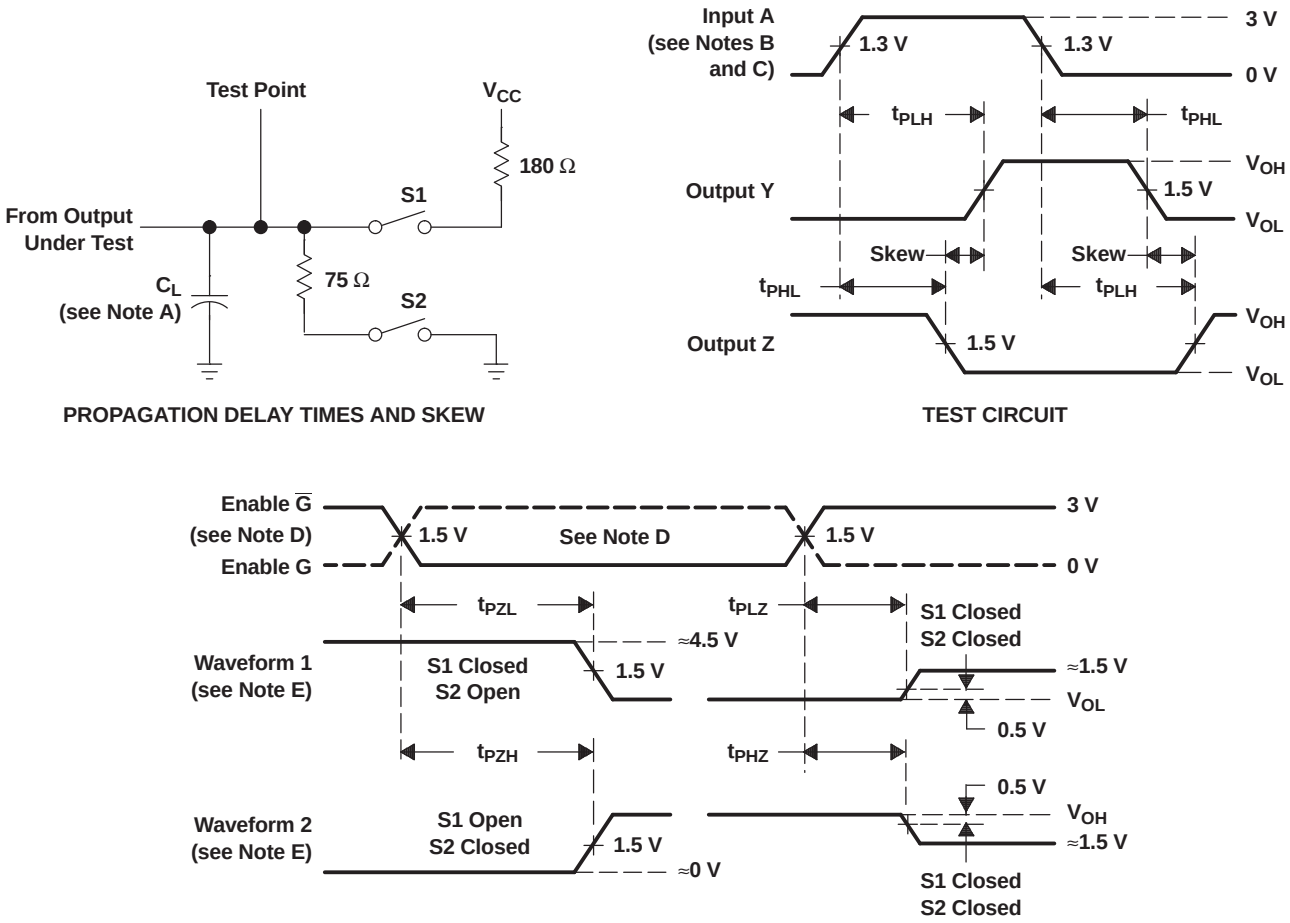

NOTES:
A. C_L includes probe and jig capacitance.
B. All input pulses are supplied by generators having the following characteristics: PRR ≤ 1 MHz, Z_O ≈ 50 Ω, t_r ≤ 15 ns, t_f ≤ 6 ns.
C. When measuring propagation delay times and skew, switches S1 and S2 are open.
D. Each enable is tested separately.
E. Waveform 1 is for an output with internal conditions such that the output is low, except when disabled by the output control. Waveform 2 is for an output with internal conditions such that the output is high, except when disabled by the output control.

Figure 11. Test Circuit and Voltage Waveforms

Copyright © 1979–2018, Texas Instruments Incorporated

8 Detailed Description

8.1 Overview

The AM26LS31x differential bus transmitter is a monolithic integrated circuit designed for unidirectional data communication on transmission lines. It is designed for balanced transmission lines and meets ANSI Standard EIA/TIA-422-B and ITU Recommendation V.11.

The AM26LS31x has a four 3-state differential line drivers that operate from a single 5-V power supply. The driver also integrates active-high and active-low enables for precise device control.

The driver is designed to handle loads of a minimum of ±30 mA of sink or source current. The driver features positive- and negative-current limiting for protection from line fault conditions.

8.2 Functional Block Diagram

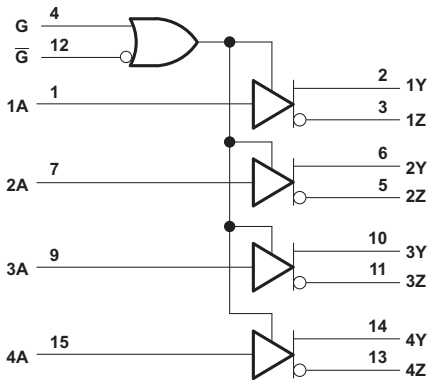

Copyright © 2016, Texas Instruments Incorporated

8.3 Feature Description

8.3.1 Complementary Output-Enable Inputs

The AM26LS31x can be configured using the G and $\overline{G}$ logic inputs to control transmitter outputs. Setting either G to a logic HIGH or $\overline{G}$ to an logic LOW enables the transmitter outputs. If G is set to logic LOW and $\overline{G}$ is set to logic HIGH, the transmitter outputs are disabled. See Table 1 for a complete truth table.

8.3.2 High Output Impedance in Power-Off Conditions

When the AM26LS31x transmitter outputs are disabled using G and $\overline{G}$, the outputs are set to a high impedance state.

8.3.3 Complementary Outputs

The AM26LS31x is the driver half of a pair of devices, with the AM26LS32 being the complementary receiver. TI recommends using these devices together for optimal performance, but any RS-422 compliant receive must ensure proper RS-422 communication and logic level translation.

8.4 Device Functional Modes

Table 1 lists the functional modes of the AM26LS31.

Table 1. Function Table[(1)] (Each Driver)

INPUT A	ENABLES		OUTPUTS	
	G	$\overline{G}$	Y	Z
H	H	X	H	L
L	H	X	L	H
H	X	L	H	L
L	X	L	L	H
X	L	H	Z	Z

(1) H = high level, L = low level,
X = irrelevant,
Z = high impedance (off)

Copyright © 1979–2018, Texas Instruments Incorporated

9 Application and Implementation

NOTE

Information in the following applications sections is not part of the TI component specification, and TI does not warrant its accuracy or completeness. TI's customers are responsible for determining suitability of components for their purposes. Customers should validate and test their design implementation to confirm system functionality.

9.1 Application Information

When designing a system that uses drivers, receivers, and transceivers that comply with RS-422 or RS-485, proper cable termination is essential for highly reliable applications with reduced reflections in the transmission line. Because RS-422 allows only one driver on the bus, if termination is used, it is placed only at the end of the cable near the last receiver. In general, RS-485 requires termination at both ends of the cable. Factors to consider when determining the type of termination usually are performance requirements of the application and the ever-present factor, cost. The different types of termination techniques discussed are unterminated lines, parallel termination, AC termination, and multipoint termination. Laboratory waveforms for each termination technique (except multipoint termination) illustrate the usefulness and robustness of RS-422 (and, indirectly, RS-485). Similar results can be obtained if 485-compliant devices and termination techniques are used. For laboratory experiments, 100 feet of 100-Ω, 24-AWG, twisted-pair cable (Bertek) was used. A single driver and receiver, TI AM26LS31 and AM26LS32C, respectively, were tested at room temperature with a 5-V supply voltage. Two plots per termination technique are shown. In each plot, the top waveform is the driver input and the bottom waveform is the receiver output. To show voltage waveforms related to transmission-line reflections, the first plot shows output waveforms from the driver at the start of the cable; the second plot shows input waveforms to the receiver at the far end of the cable.

9.2 Typical Application

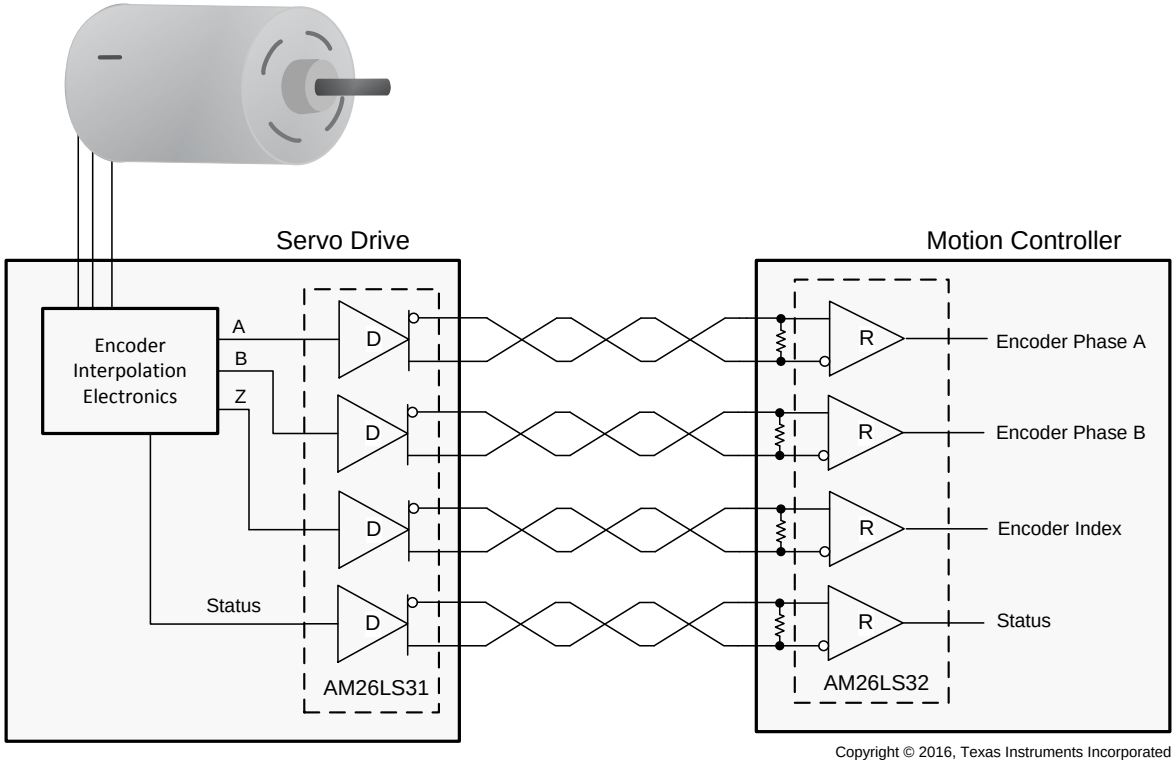

Figure 12. Encoder Application

Typical Application (continued)

9.2.1 Design Requirements

This example requires the following:

- 5-V power source
- RS-485 bus operating at 10 Mbps or less
- Connector that ensures the correct polarity for port pins

9.2.2 Detailed Design Procedure

Place the device close to bus connector to keep traces (stub) short to prevent adding reflections to the bus line.

If desired, add external fail-safe biasing to ensure 200 mV on the A-B port, if the drive is in high impedance state (see *Failsafe in RS-485 data buses*).

9.2.3 Application Curve

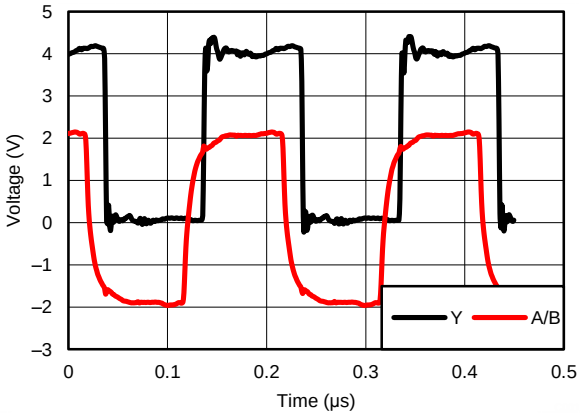

Figure 13. Differential 120-Ω Terminated Output Waveforms (Cat 5E Cable)

Copyright © 1979–2018, Texas Instruments Incorporated

10 Power Supply Recommendations

Place a 0.1-μF bypass capacitors close to the power-supply pins to reduce errors coupling in from noisy or high impedance power supplies.

11 Layout

11.1 Layout Guidelines

For best operational performance of the device, use good PCB layout practices, including:

- Noise can often propagate into analog circuitry through the power supply of the circuit. Bypass capacitors are used to reduce the coupled noise by providing low impedance power sources local to the analog circuitry.
  - Connect low-ESR, 0.1-μF ceramic bypass capacitors between each supply pin and ground, placed as close to the device as possible. A single bypass capacitor from V+ to ground is applicable for single-supply applications.
- Separate grounding for analog and digital portions of circuitry is one of the simplest and most-effective methods of noise suppression. One or more layers on multilayer PCBs are usually devoted to ground planes. A ground plane helps distribute heat and reduces EMI noise pickup. Make sure to physically separate digital and analog grounds, paying attention to the flow of the ground current.
- To reduce parasitic coupling, run the input traces as far away from the supply or output traces as possible. If it is not possible to keep them separate, it is much better to cross the sensitive trace perpendicular as opposed to in parallel with the noisy trace.
- Place the external components as close to the device as possible. Keeping RF and RG close to the inverting input minimizes parasitic capacitance.
- Keep the length of input traces as short as possible. Always remember that the input traces are the most sensitive part of the circuit.

11.2 Layout Example

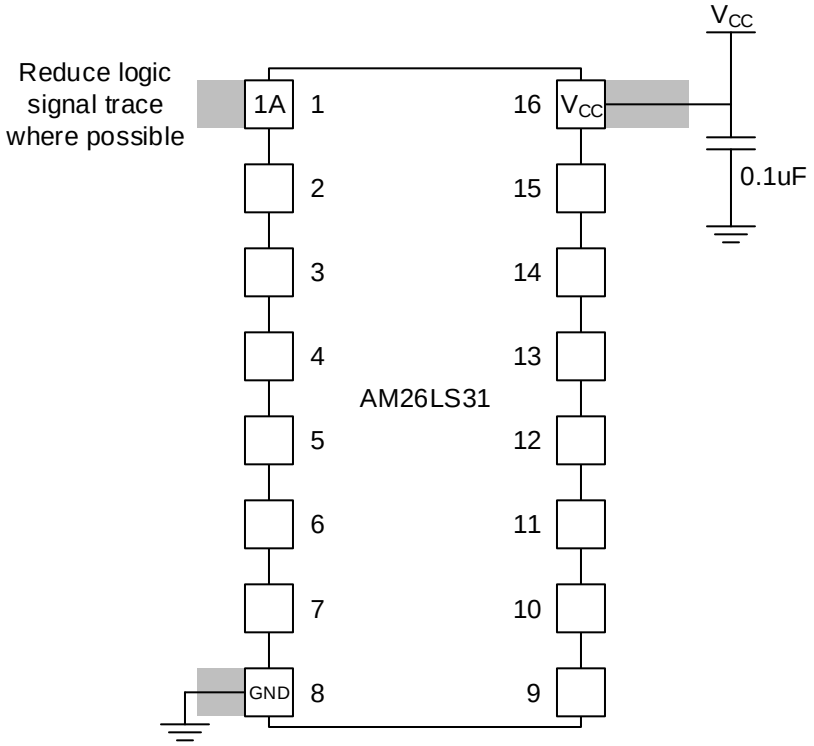

Figure 14. Layout Recommendation

12 器件和文档支持

12.1 文档支持

12.1.1 相关文档

请参阅如下相关文档：

《RS-485 数据总线中的失效防护》(SLYT080)

12.2 相关链接

下表列出了快速访问链接。类别包括技术文档、支持与社区资源、工具和软件，以及申请样片或购买产品的快速链接。

表 **2.** 相关链接

器件	产品文件夹	样片与购买	技术文档	工具与软件	支持和社区
AM26LS31	请单击此处	请单击此处	请单击此处	请单击此处	请单击此处
AM26LS31C	请单击此处	请单击此处	请单击此处	请单击此处	请单击此处
AM26LS31I	请单击此处	请单击此处	请单击此处	请单击此处	请单击此处
AM26LS31M	请单击此处	请单击此处	请单击此处	请单击此处	请单击此处

12.3 接收文档更新通知

如需接收文档更新通知，请导航至 TI.com.cn 上的器件产品文件夹。单击右上角的*通知我* 进行注册，即可每周接收产品信息更改摘要。有关更改的详细信息，请查看任何已修订文档中包含的修订历史记录。

12.4 社区资源

下列链接提供到 TI 社区资源的连接。链接的内容由各个分销商“按照原样”提供。这些内容并不构成 TI 技术规范，并且不一定反映 TI 的观点；请参阅 TI 的 《使用条款》。

TI E2E™ 在线社区 ***TI 的工程师对工程师 (E2E) 社区。***此社区的创建目的在于促进工程师之间的协作。在 e2e.ti.com 中，您可以咨询问题、分享知识、拓展思路并与同行工程师一道帮助解决问题。

设计支持 ***TI 参考设计支持*** 可帮助您快速查找有帮助的 E2E 论坛、设计支持工具以及技术支持的联系信息。

12.5 商标

E2E is a trademark of Texas Instruments.
All other trademarks are the property of their respective owners.

12.6 静电放电警告

这些装置包含有限的内置 ESD 保护。 存储或装卸时，应将导线一起截短或将装置放置于导电泡棉中，以防止 MOS 门极遭受静电损伤。

12.7 术语表

SLYZ022 — *TI 术语表*。

这份术语表列出并解释术语、缩写和定义。

13 机械、封装和可订购信息

以下页面包含机械、封装和可订购信息。这些信息是指定器件的最新可用数据。数据如有变更，恕不另行通知，且不会对此文档进行修订。如需获取此产品说明书的浏览器版本，请查阅左侧的导航栏。

版权 © 1979–2018, Texas Instruments Incorporated

PACKAGING INFORMATION

Orderable Device	Status (1)	Package Type	Package Drawing	Pins	Package Qty	Eco Plan (2)	Lead finish/ Ball material (6)	MSL Peak Temp (3)	Op Temp (°C)	Device Marking (4/5)	Samples
5962-7802301M2A	ACTIVE	LCCC	FK	20	1	Non-RoHS & Green	SNPB	N / A for Pkg Type	-55 to 125	5962-7802301M2A AM26LS31 MFKB	Samples
5962-7802301MEA	ACTIVE	CDIP	J	16	1	Non-RoHS & Green	SNPB	N / A for Pkg Type	-55 to 125	5962-7802301MEA AM26LS31MJB	Samples
5962-7802301MFA	ACTIVE	CFP	W	16	1	Non-RoHS & Green	SNPB	N / A for Pkg Type	-55 to 125	5962-7802301MFA AM26LS31MWB	Samples
5962-7802301Q2A	ACTIVE	LCCC	FK	20	1	Non-RoHS & Green	SNPB	N / A for Pkg Type		5962-7802301Q2A AM26LS31M	Samples
AM26LS31CD	LIFEBUY	SOIC	D	16	40	RoHS & Green	NIPDAU	Level-1-260C-UNLIM	0 to 70	AM26LS31C	
AM26LS31CDBR	LIFEBUY	SSOP	DB	16	2000	RoHS & Green	NIPDAU	Level-1-260C-UNLIM	0 to 70	SA31C	
AM26LS31CDE4	LIFEBUY	SOIC	D	16	40	RoHS & Green	NIPDAU	Level-1-260C-UNLIM	0 to 70	AM26LS31C	
AM26LS31CDG4	LIFEBUY	SOIC	D	16	40	RoHS & Green	NIPDAU	Level-1-260C-UNLIM	0 to 70	AM26LS31C	
AM26LS31CDR	ACTIVE	SOIC	D	16	2500	RoHS & Green	NIPDAU	Level-1-260C-UNLIM	0 to 70	AM26LS31C	Samples
AM26LS31CDRE4	LIFEBUY	SOIC	D	16	2500	RoHS & Green	NIPDAU	Level-1-260C-UNLIM	0 to 70	AM26LS31C	
AM26LS31CDRG4	LIFEBUY	SOIC	D	16	2500	RoHS & Green	NIPDAU	Level-1-260C-UNLIM	0 to 70	AM26LS31C	
AM26LS31CN	ACTIVE	PDIP	N	16	25	RoHS & Green	NIPDAU	N / A for Pkg Type	0 to 70	AM26LS31CN	Samples
AM26LS31CNS-H	LIFEBUY	SO	NS	16	50	RoHS & Green	NIPDAU	Level-1-260C-UNLIM		26LS31-H	
AM26LS31CNSR	ACTIVE	SO	NS	16	2000	RoHS & Green	NIPDAU	Level-1-260C-UNLIM	0 to 70	26LS31	Samples
AM26LS31INSR	LIFEBUY	SO	NS	16	2000	RoHS & Green	NIPDAU	Level-1-260C-UNLIM	-40 to 85	26LS31	
AM26LS31MFKB	ACTIVE	LCCC	FK	20	1	Non-RoHS & Green	SNPB	N / A for Pkg Type	-55 to 125	5962-7802301M2A AM26LS31 MFKB	Samples
AM26LS31MJB	ACTIVE	CDIP	J	16	1	Non-RoHS & Green	SNPB	N / A for Pkg Type	-55 to 125	5962-7802301MEA AM26LS31MJB	Samples

Orderable Device	Status (1)	Package Type	Package Drawing	Pins	Package Qty	Eco Plan (2)	Lead finish/ Ball material (6)	MSL Peak Temp (3)	Op Temp (°C)	Device Marking (4/5)	Samples
AM26LS31MWB	ACTIVE	CFP	W	16	1	Non-RoHS & Green	SNPB	N / A for Pkg Type	-55 to 125	5962-7802301MF A AM26LS31MWB	Samples

(1) The marketing status values are defined as follows:
ACTIVE: Product device recommended for new designs.
LIFEBUY: TI has announced that the device will be discontinued, and a lifetime-buy period is in effect.
NRND: Not recommended for new designs. Device is in production to support existing customers, but TI does not recommend using this part in a new design.
PREVIEW: Device has been announced but is not in production. Samples may or may not be available.
OBSOLETE: TI has discontinued the production of the device.

(2) **RoHS:** TI defines "RoHS" to mean semiconductor products that are compliant with the current EU RoHS requirements for all 10 RoHS substances, including the requirement that RoHS substance do not exceed 0.1% by weight in homogeneous materials. Where designed to be soldered at high temperatures, "RoHS" products are suitable for use in specified lead-free processes. TI may reference these types of products as "Pb-Free".
RoHS Exempt: TI defines "RoHS Exempt" to mean products that contain lead but are compliant with EU RoHS pursuant to a specific EU RoHS exemption.
Green: TI defines "Green" to mean the content of Chlorine (Cl) and Bromine (Br) based flame retardants meet JS709B low halogen requirements of <=1000ppm threshold. Antimony trioxide based flame retardants must also meet the <=1000ppm threshold requirement.

(3) MSL, Peak Temp. - The Moisture Sensitivity Level rating according to the JEDEC industry standard classifications, and peak solder temperature.

(4) There may be additional marking, which relates to the logo, the lot trace code information, or the environmental category on the device.

(5) Multiple Device Markings will be inside parentheses. Only one Device Marking contained in parentheses and separated by a "~" will appear on a device. If a line is indented then it is a continuation of the previous line and the two combined represent the entire Device Marking for that device.

(6) Lead finish/Ball material - Orderable Devices may have multiple material finish options. Finish options are separated by a vertical ruled line. Lead finish/Ball material values may wrap to two lines if the finish value exceeds the maximum column width.

Important Information and Disclaimer: The information provided on this page represents TI's knowledge and belief as of the date that it is provided. TI bases its knowledge and belief on information provided by third parties, and makes no representation or warranty as to the accuracy of such information. Efforts are underway to better integrate information from third parties. TI has taken and continues to take reasonable steps to provide representative and accurate information but may not have conducted destructive testing or chemical analysis on incoming materials and chemicals. TI and TI suppliers consider certain information to be proprietary, and thus CAS numbers and other limited information may not be available for release.

In no event shall TI's liability arising out of such information exceed the total purchase price of the TI part(s) at issue in this document sold by TI to Customer on an annual basis.

OTHER QUALIFIED VERSIONS OF AM26LS31, AM26LS31M :

- Catalog : AM26LS31
- Military : AM26LS31M

NOTE: Qualified Version Definitions:

- Catalog - TI's standard catalog product
- Military - QML certified for Military and Defense Applications

TAPE AND REEL INFORMATION

REEL DIMENSIONS

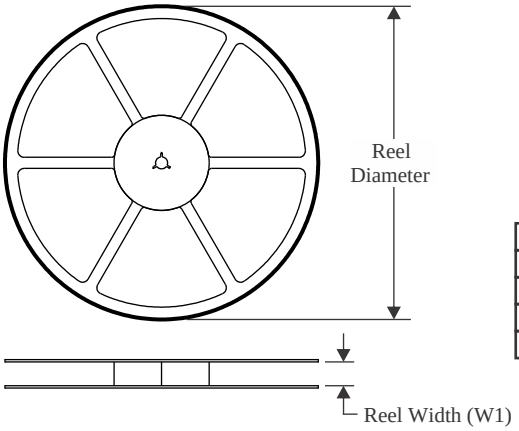

TAPE DIMENSIONS

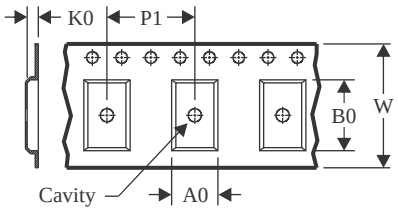

A0	Dimension designed to accommodate the component width
B0	Dimension designed to accommodate the component length
K0	Dimension designed to accommodate the component thickness
W	Overall width of the carrier tape
P1	Pitch between successive cavity centers

QUADRANT ASSIGNMENTS FOR PIN 1 ORIENTATION IN TAPE

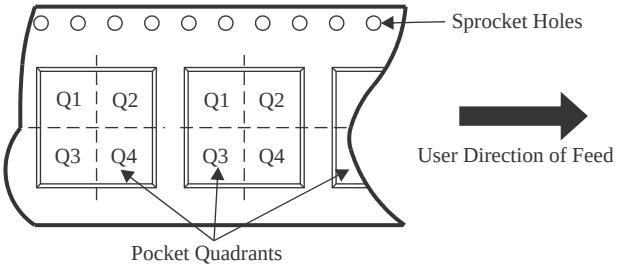

*All dimensions are nominal

Device	Package Type	Package Drawing	Pins	SPQ	Reel Diameter (mm)	Reel Width W1 (mm)	A0 (mm)	B0 (mm)	K0 (mm)	P1 (mm)	W (mm)	Pin1 Quadrant
AM26LS31CDBR	SSOP	DB	16	2000	330.0	16.4	8.35	6.6	2.4	12.0	16.0	Q1
AM26LS31CDR	SOIC	D	16	2500	330.0	16.4	6.5	10.3	2.1	8.0	16.0	Q1
AM26LS31CDR	SOIC	D	16	2500	330.0	16.4	6.5	10.3	2.1	8.0	16.0	Q1
AM26LS31CDRG4	SOIC	D	16	2500	330.0	16.4	6.5	10.3	2.1	8.0	16.0	Q1
AM26LS31CDRG4	SOIC	D	16	2500	330.0	16.4	6.5	10.3	2.1	8.0	16.0	Q1
AM26LS31CNSR	SO	NS	16	2000	330.0	16.4	8.2	10.5	2.5	12.0	16.0	Q1
AM26LS31INSR	SO	NS	16	2000	330.0	16.4	8.2	10.5	2.5	12.0	16.0	Q1

TAPE AND REEL BOX DIMENSIONS

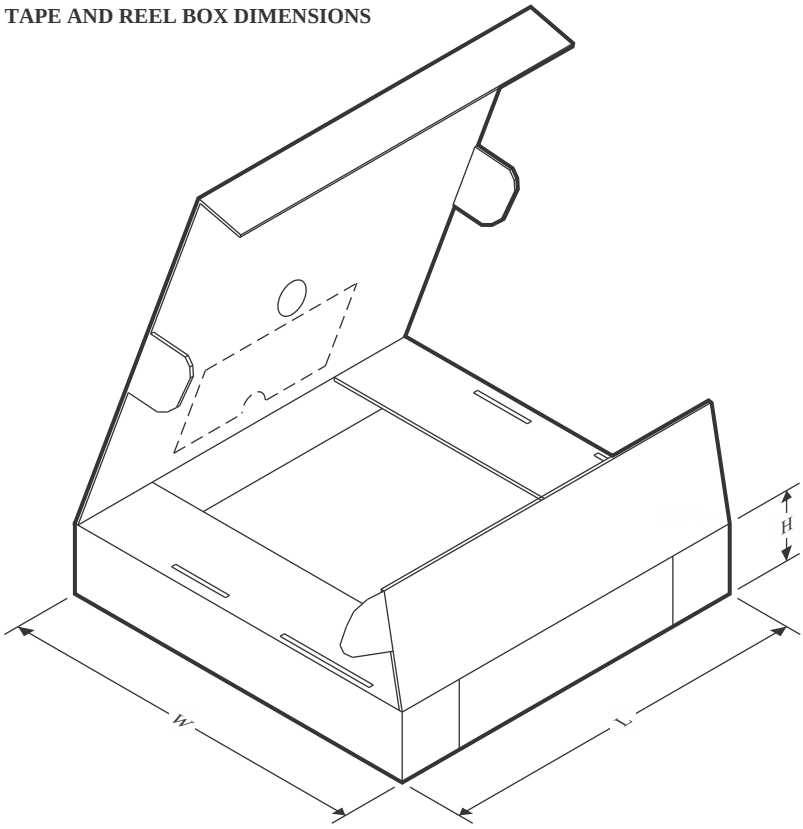

*All dimensions are nominal

Device	Package Type	Package Drawing	Pins	SPQ	Length (mm)	Width (mm)	Height (mm)
AM26LS31CDBR	SSOP	DB	16	2000	356.0	356.0	35.0
AM26LS31CDR	SOIC	D	16	2500	356.0	356.0	35.0
AM26LS31CDR	SOIC	D	16	2500	340.5	336.1	32.0
AM26LS31CDRG4	SOIC	D	16	2500	356.0	356.0	35.0
AM26LS31CDRG4	SOIC	D	16	2500	340.5	336.1	32.0
AM26LS31CNSR	SO	NS	16	2000	367.0	367.0	38.0
AM26LS31INSR	SO	NS	16	2000	356.0	356.0	35.0

TUBE

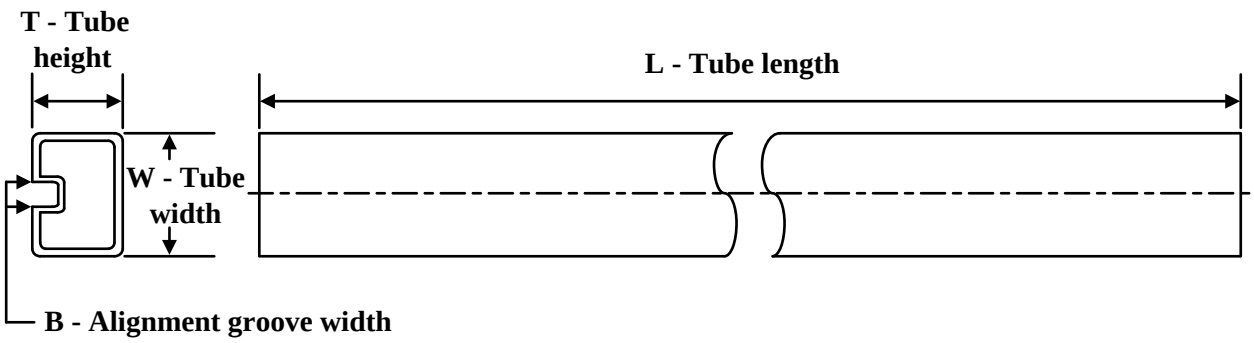

*All dimensions are nominal

Device	Package Name	Package Type	Pins	SPQ	L (mm)	W (mm)	T (µm)	B (mm)
5962-7802301M2A	FK	LCCC	20	1	506.98	12.06	2030	NA
5962-7802301MFA	W	CFP	16	1	506.98	26.16	6220	NA
5962-7802301Q2A	FK	LCCC	20	1	506.98	12.06	2030	NA
AM26LS31CD	D	SOIC	16	40	506.6	8	3940	4.32
AM26LS31CD	D	SOIC	16	40	507	8	3940	4.32
AM26LS31CDE4	D	SOIC	16	40	507	8	3940	4.32
AM26LS31CDE4	D	SOIC	16	40	506.6	8	3940	4.32
AM26LS31CDG4	D	SOIC	16	40	506.6	8	3940	4.32
AM26LS31CDG4	D	SOIC	16	40	507	8	3940	4.32
AM26LS31CN	N	PDIP	16	25	506	13.97	11230	4.32
AM26LS31CNS-H	NS	SOP	16	50	530	10.5	4000	4.1
AM26LS31MFKB	FK	LCCC	20	1	506.98	12.06	2030	NA
AM26LS31MWB	W	CFP	16	1	506.98	26.16	6220	NA

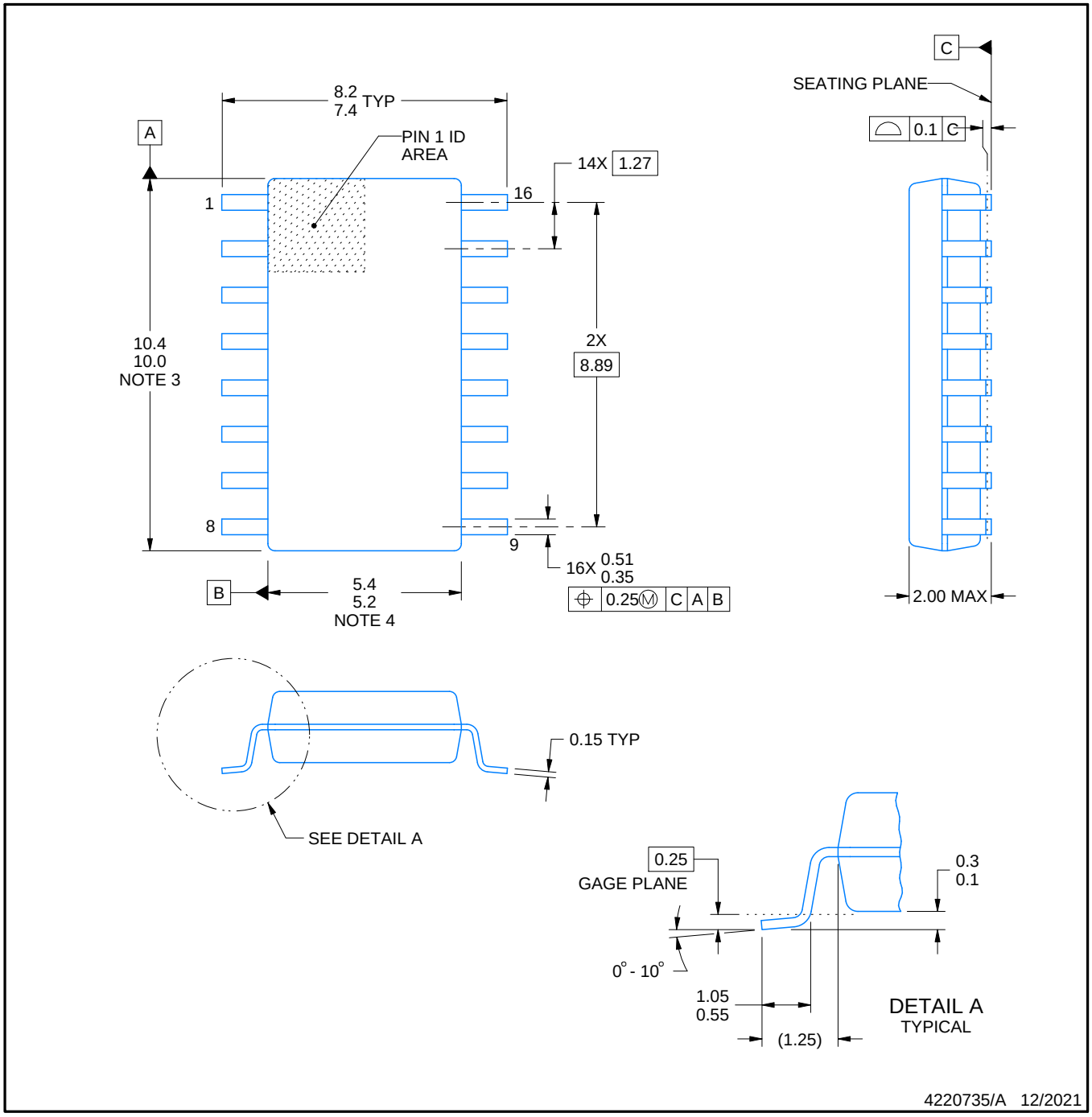

NOTES:

1. All linear dimensions are in millimeters. Dimensions in parenthesis are for reference only. Dimensioning and tolerancing per ASME Y14.5M.
2. This drawing is subject to change without notice.
3. This dimension does not include mold flash, protrusions, or gate burrs. Mold flash, protrusions, or gate burrs shall not exceed 0.15 mm, per side.
4. This dimension does not include interlead flash. Interlead flash shall not exceed 0.25 mm, per side.

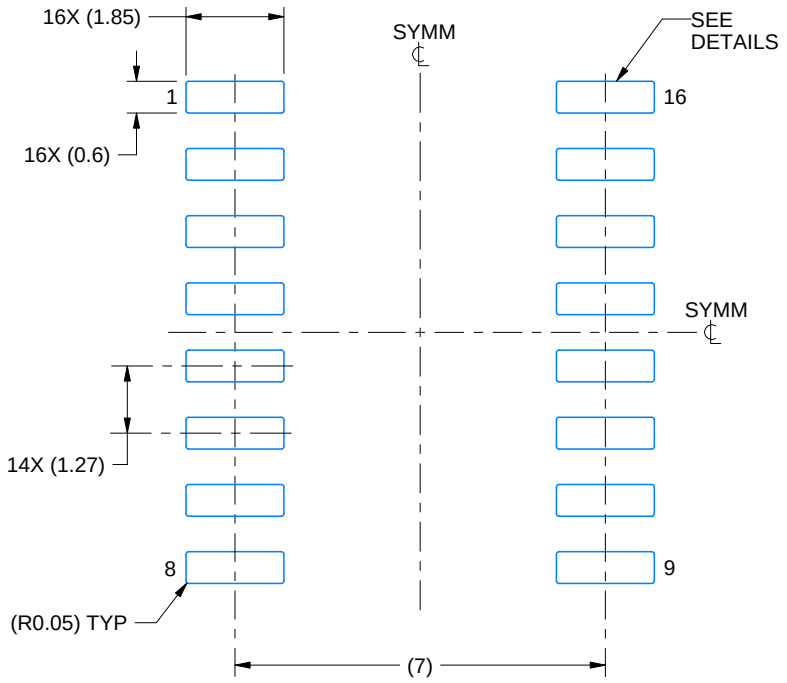

LAND PATTERN EXAMPLE
SCALE:7X

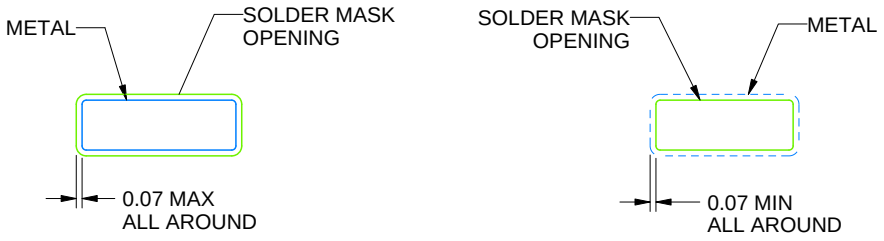

NON SOLDER MASK DEFINED

SOLDER MASK DEFINED

SOLDER MASK DETAILS

4220735/A 12/2021

NOTES: (continued)

5. Publication IPC-7351 may have alternate designs.
6. Solder mask tolerances between and around signal pads can vary based on board fabrication site.

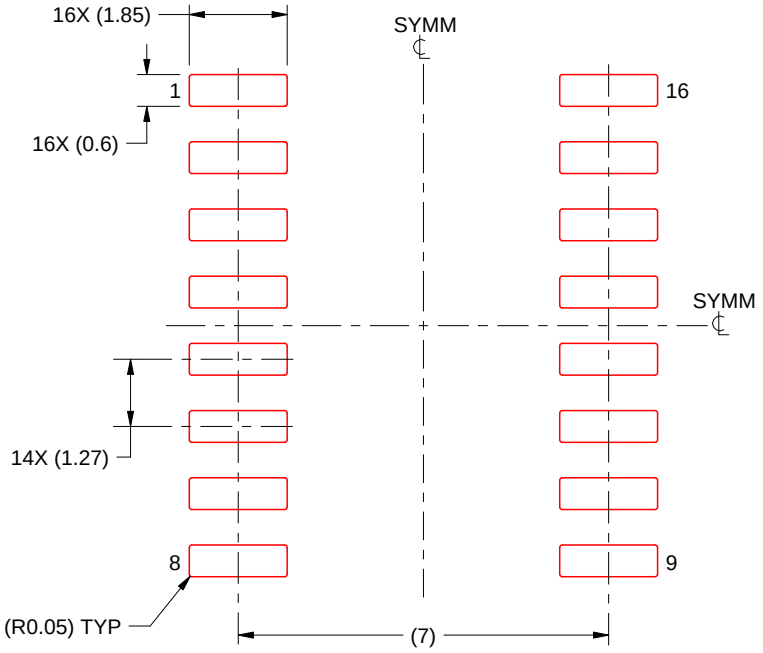

SOLDER PASTE EXAMPLE
BASED ON 0.125 mm THICK STENCIL
SCALE:7X

4220735/A 12/2021

NOTES: (continued)

7. Laser cutting apertures with trapezoidal walls and rounded corners may offer better paste release. IPC-7525 may have alternate design recommendations.
8. Board assembly site may have different recommendations for stencil design.

D (R–PDSO–G16) PLASTIC SMALL OUTLINE

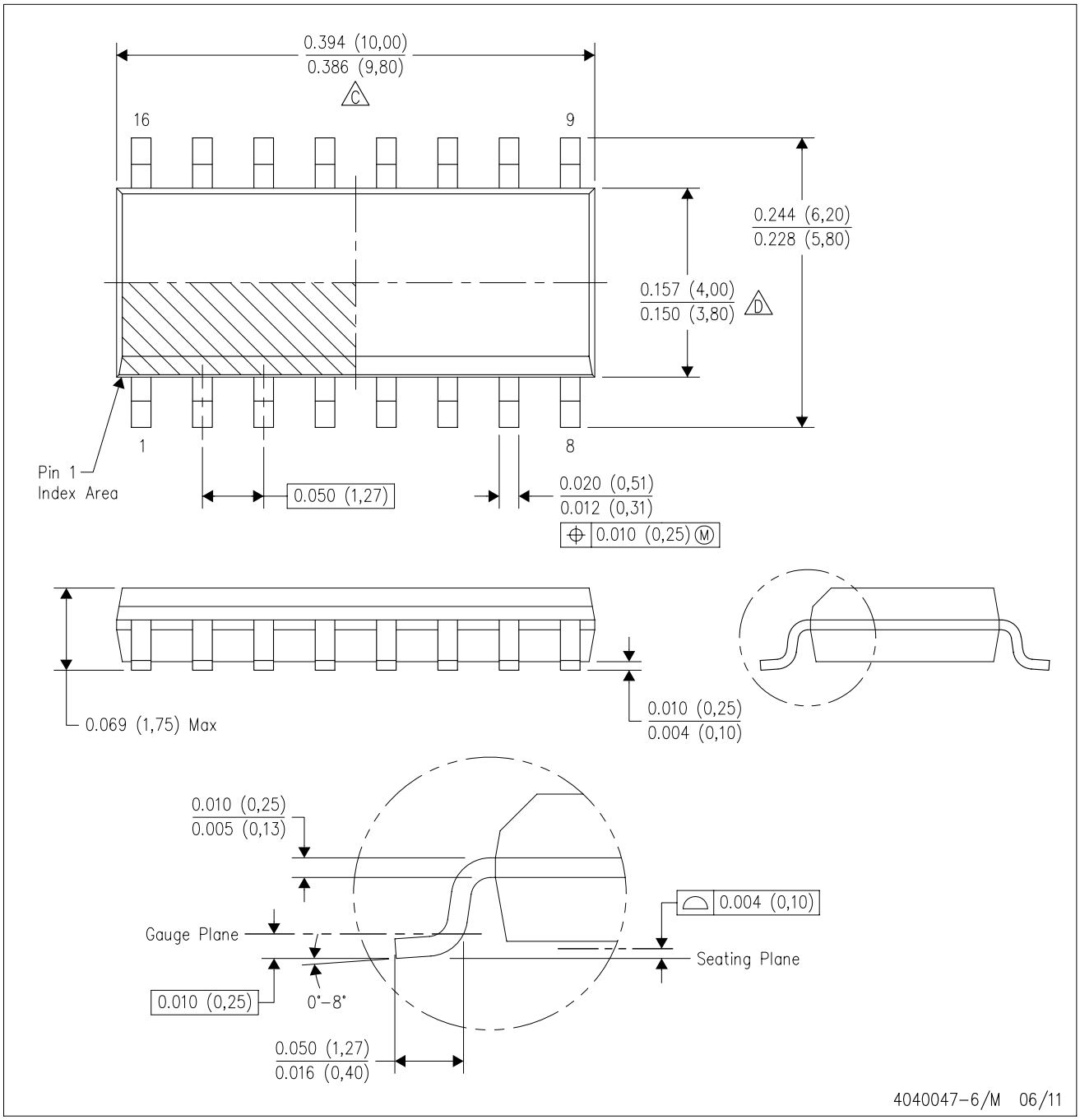

NOTES:
A. All linear dimensions are in inches (millimeters).
B. This drawing is subject to change without notice.
C. Body length does not include mold flash, protrusions, or gate burrs. Mold flash, protrusions, or gate burrs shall not exceed 0.006 (0,15) each side.
D. Body width does not include interlead flash. Interlead flash shall not exceed 0.017 (0,43) each side.
E. Reference JEDEC MS–012 variation AC.

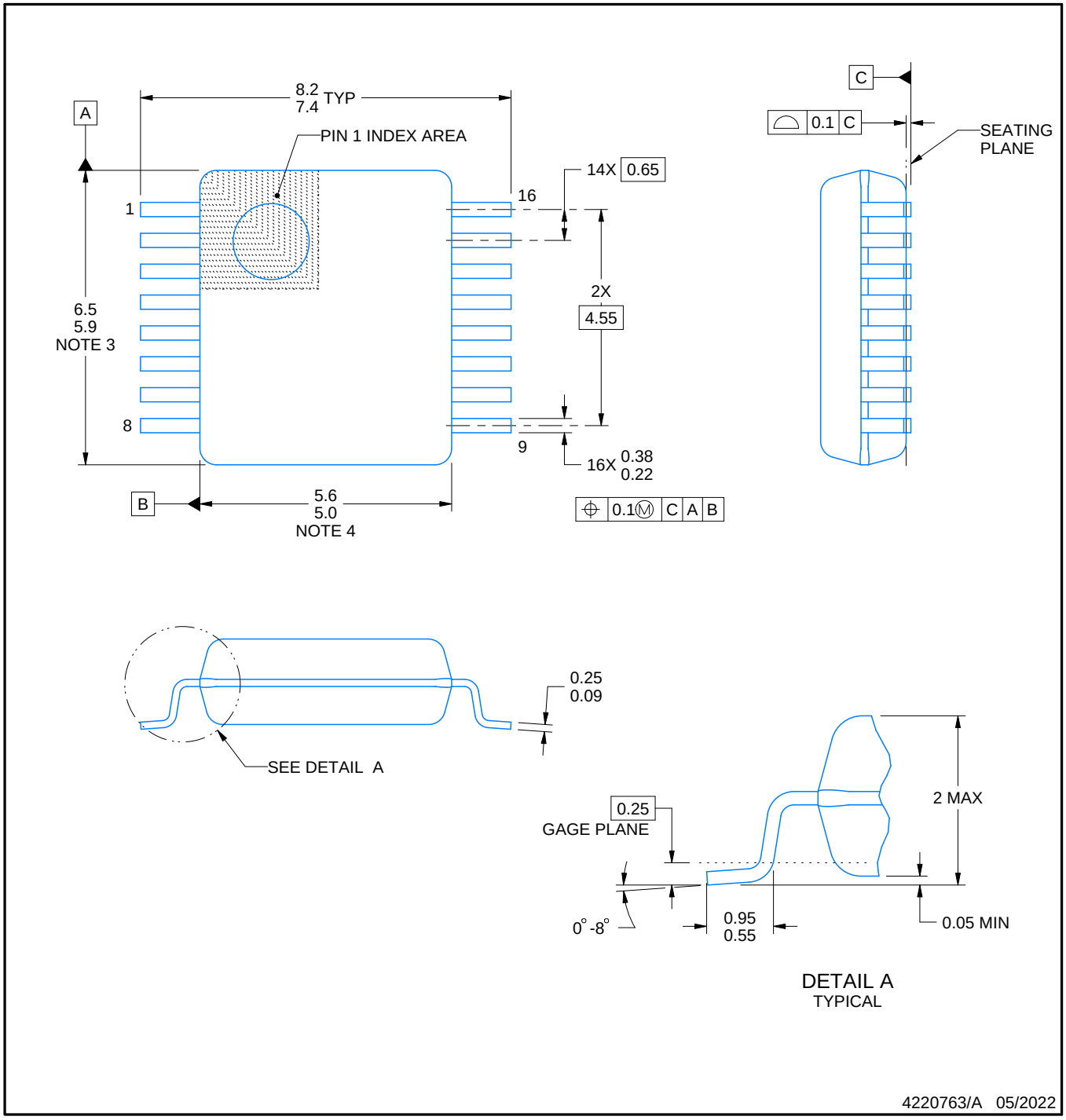

NOTES:

1. All linear dimensions are in millimeters. Any dimensions in parenthesis are for reference only. Dimensioning and tolerancing per ASME Y14.5M.
2. This drawing is subject to change without notice.
3. This dimension does not include mold flash, protrusions, or gate burrs. Mold flash, protrusions, or gate burrs shall not exceed 0.15 mm per side.
4. Reference JEDEC registration MO-150.

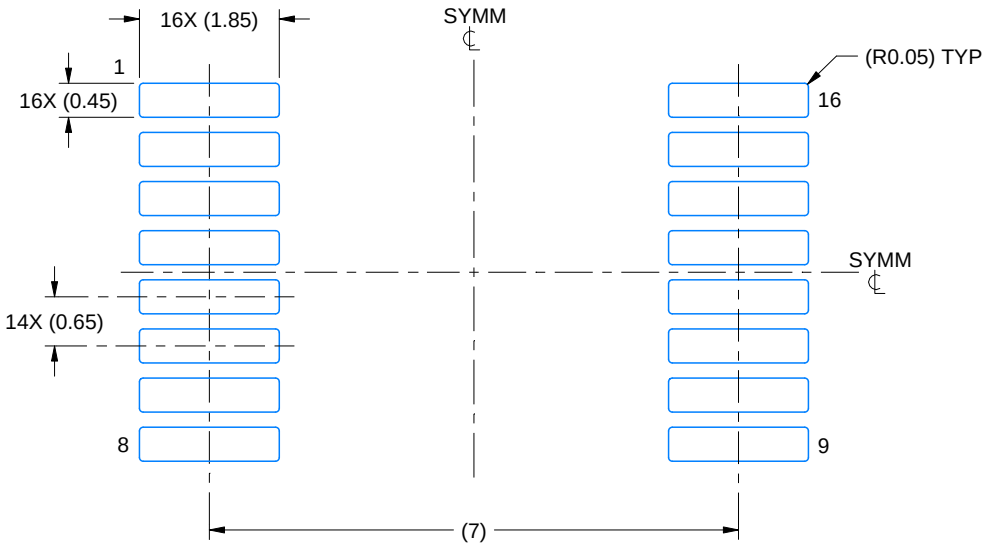

LAND PATTERN EXAMPLE
EXPOSED METAL SHOWN
SCALE: 10X

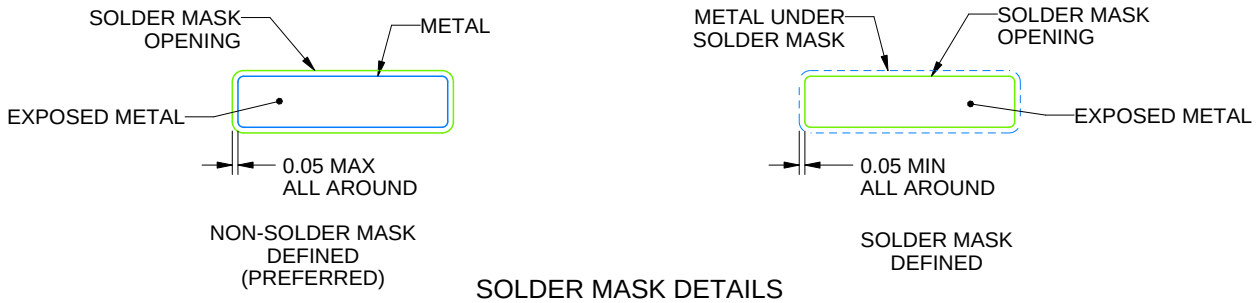

SOLDER MASK DETAILS

4220763/A 05/2022

NOTES: (continued)

5. Publication IPC-7351 may have alternate designs.
6. Solder mask tolerances between and around signal pads can vary based on board fabrication site.

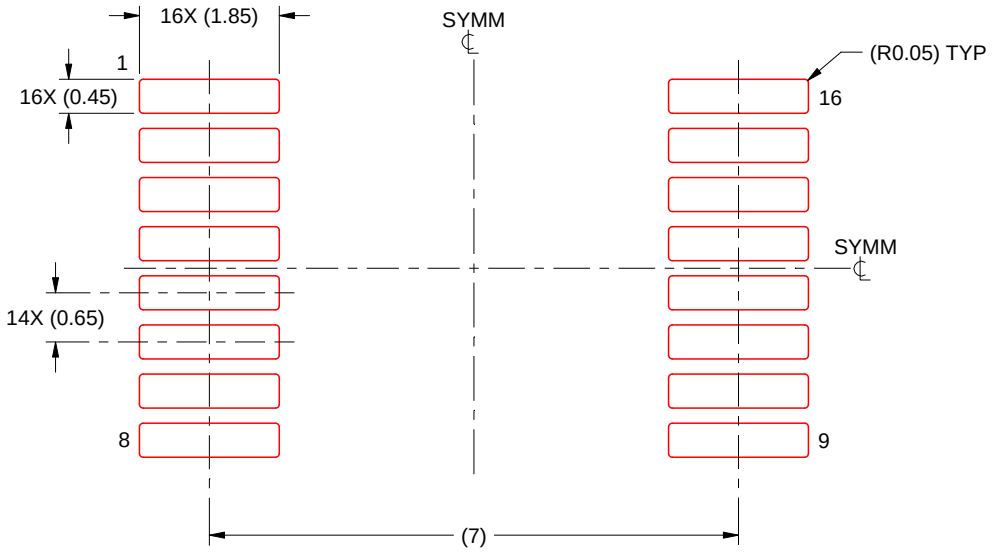

SOLDER PASTE EXAMPLE
BASED ON 0.125 mm THICK STENCIL
SCALE: 10X

4220763/A 05/2022

NOTES: (continued)

7. Laser cutting apertures with trapezoidal walls and rounded corners may offer better paste release. IPC-7525 may have alternate design recommendations.
8. Board assembly site may have different recommendations for stencil design.

MECHANICAL DATA

NS (R-PDSO-G)** **PLASTIC SMALL-OUTLINE PACKAGE**

14-PINS SHOWN

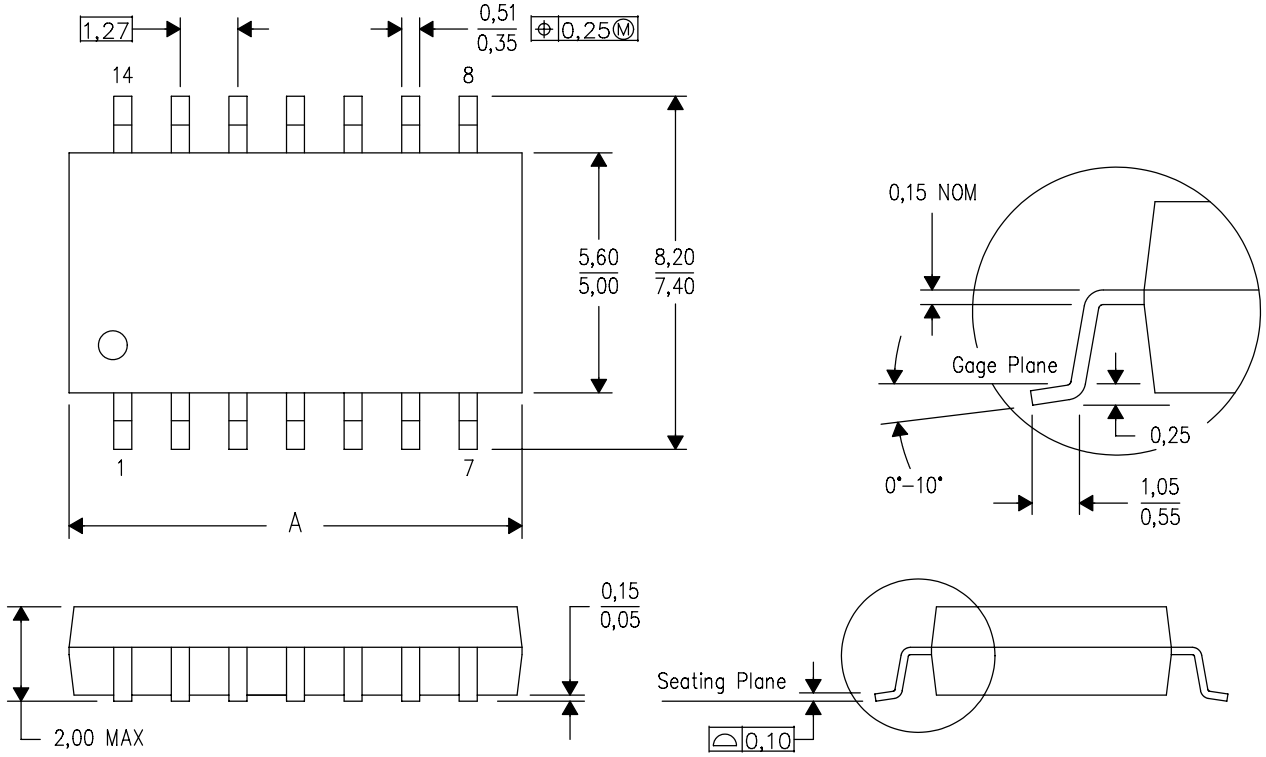

DIM \ PINS **	14	16	20	24
A MAX	10,50	10,50	12,90	15,30
A MIN	9,90	9,90	12,30	14,70

4040062/C 03/03

NOTES:
A. All linear dimensions are in millimeters.
B. This drawing is subject to change without notice.
C. Body dimensions do not include mold flash or protrusion, not to exceed 0,15.

W (R–GDFP–F16) CERAMIC DUAL FLATPACK

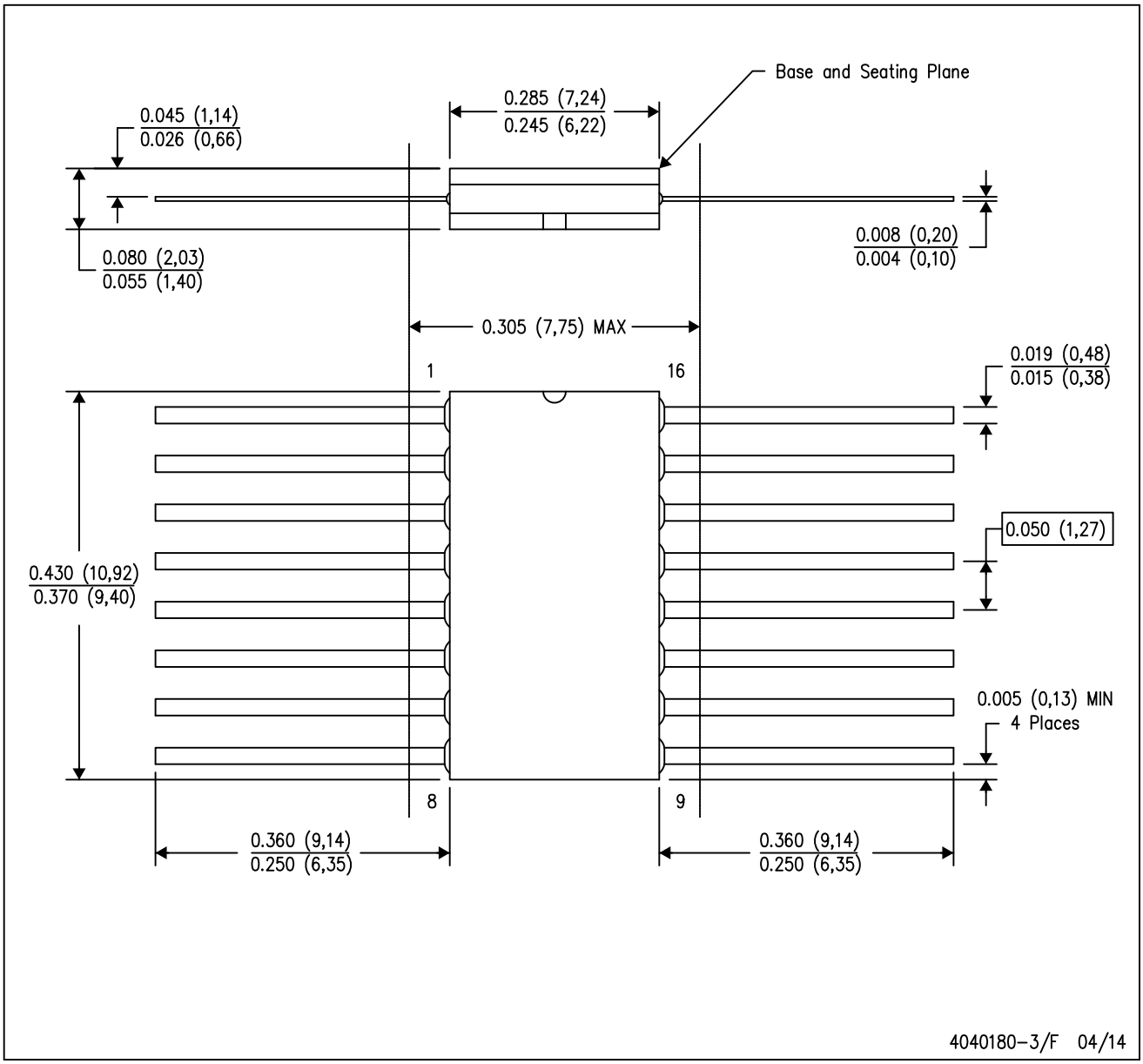

NOTES:
A. All linear dimensions are in inches (millimeters).
B. This drawing is subject to change without notice.
C. This package can be hermetically sealed with a ceramic lid using glass frit.
D. Index point is provided on cap for terminal identification only.
E. Falls within MIL STD 1835 GDFP2–F16

GENERIC PACKAGE VIEW

FK 20

LCCC - 2.03 mm max height

8.89 x 8.89, 1.27 mm pitch

LEADLESS CERAMIC CHIP CARRIER

This image is a representation of the package family, actual package may vary.
Refer to the product data sheet for package details.

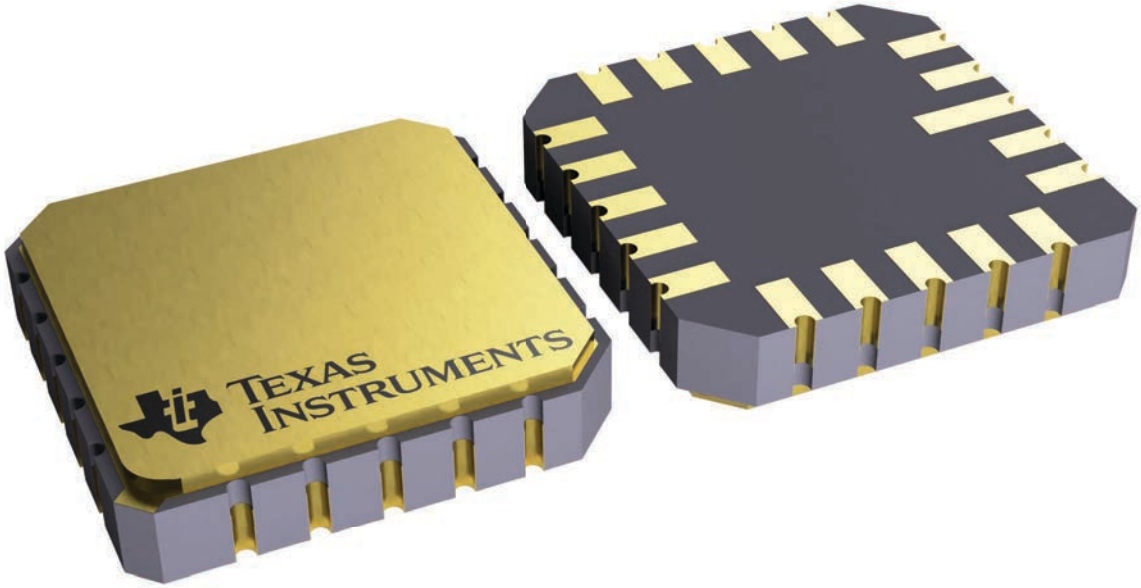

4229370VA\

J (R–GDIP–T**) CERAMIC DUAL IN–LINE PACKAGE

14 LEADS SHOWN

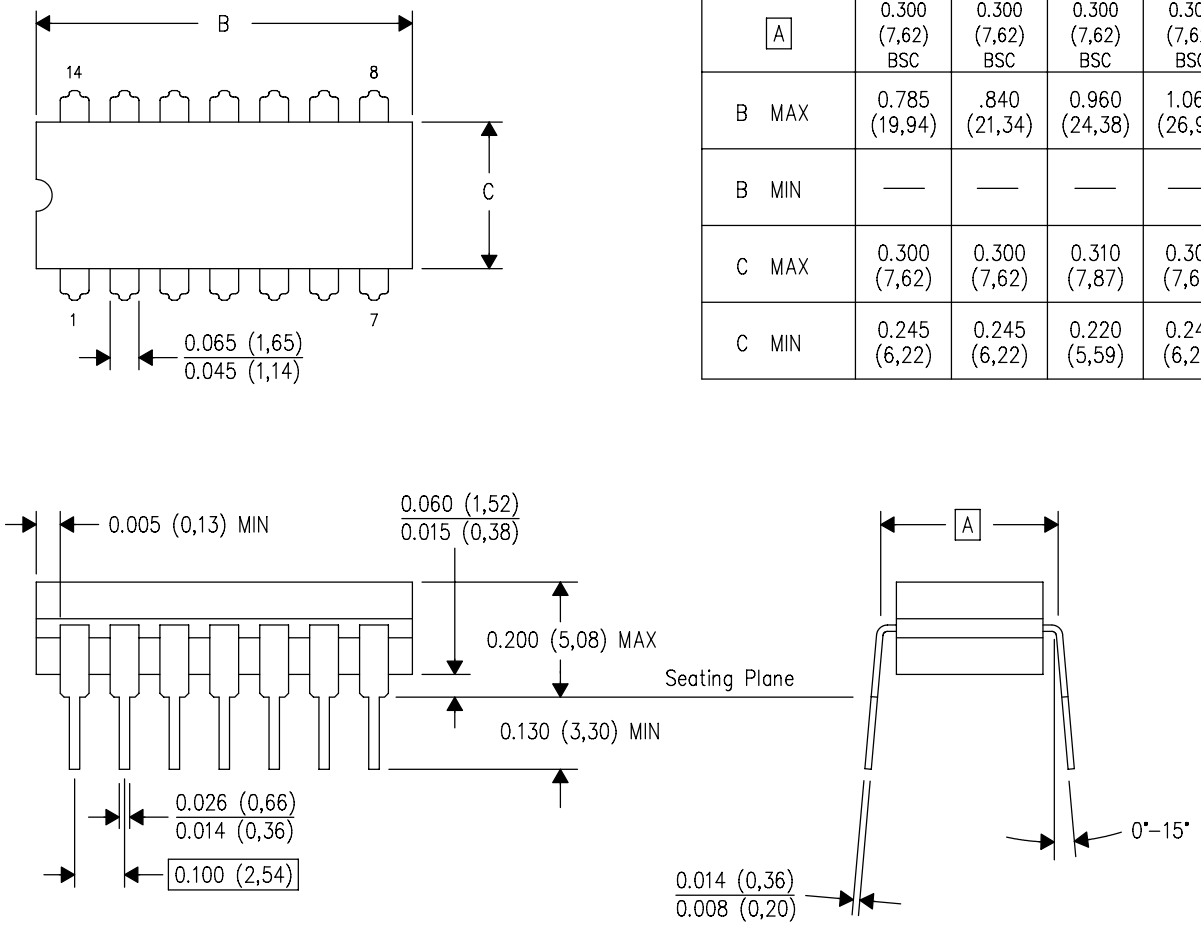

DIM \ PINS **	14	16	18	20
A	0.300 (7,62) BSC	0.300 (7,62) BSC	0.300 (7,62) BSC	0.300 (7,62) BSC
B MAX	0.785 (19,94)	.840 (21,34)	0.960 (24,38)	1.060 (26,92)
B MIN	—	—	—	—
C MAX	0.300 (7,62)	0.300 (7,62)	0.310 (7,87)	0.300 (7,62)
C MIN	0.245 (6,22)	0.245 (6,22)	0.220 (5,59)	0.245 (6,22)

4040083/F 03/03

NOTES:
- A. All linear dimensions are in inches (millimeters).
- B. This drawing is subject to change without notice.
- C. This package is hermetically sealed with a ceramic lid using glass frit.
- D. Index point is provided on cap for terminal identification only on press ceramic glass frit seal only.
- E. Falls within MIL STD 1835 GDIP1–T14, GDIP1–T16, GDIP1–T18 and GDIP1–T20.

N (R–PDIP–T**) PLASTIC DUAL–IN–LINE PACKAGE

16 PINS SHOWN

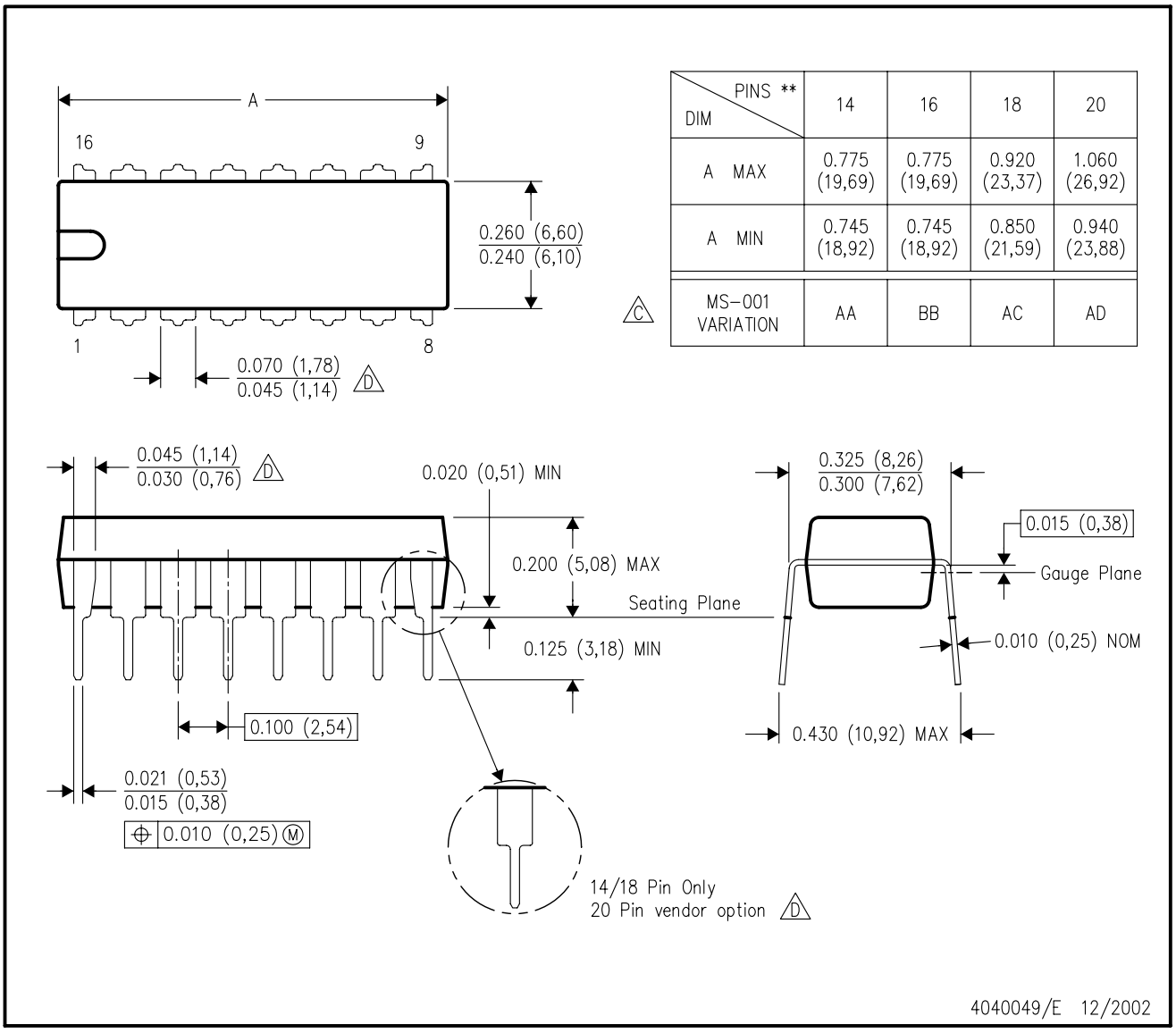

DIM \ PINS **	14	16	18	20
A MAX	0.775 (19,69)	0.775 (19,69)	0.920 (23,37)	1.060 (26,92)
A MIN	0.745 (18,92)	0.745 (18,92)	0.850 (21,59)	0.940 (23,88)
MS–001 VARIATION (C)	AA	BB	AC	AD

NOTES:
A. All linear dimensions are in inches (millimeters).
B. This drawing is subject to change without notice.
C. Falls within JEDEC MS–001, except 18 and 20 pin minimum body length (Dim A).
D. The 20 pin end lead shoulder width is a vendor option, either half or full width.

重要声明和免责声明

TI“按原样”提供技术和可靠性数据（包括数据表）、设计资源（包括参考设计）、应用或其他设计建议、网络工具、安全信息和其他资源，不保证没有瑕疵且不做出任何明示或暗示的担保，包括但不限于对适销性、某特定用途方面的适用性或不侵犯任何第三方知识产权的暗示担保。

这些资源可供使用 TI 产品进行设计的熟练开发人员使用。您将自行承担以下全部责任：(1) 针对您的应用选择合适的 TI 产品，(2) 设计、验证并测试您的应用，(3) 确保您的应用满足相应标准以及任何其他功能安全、信息安全、监管或其他要求。

这些资源如有变更，恕不另行通知。TI 授权您仅可将这些资源用于研发本资源所述的 TI 产品的应用。严禁对这些资源进行其他复制或展示。您无权使用任何其他 TI 知识产权或任何第三方知识产权。您应全额赔偿因在这些资源的使用中对 TI 及其代表造成的任何索赔、损害、成本、损失和债务，TI 对此概不负责。

TI 提供的产品受 TI 的销售条款或 ti.com 上其他适用条款/TI 产品随附的其他适用条款的约束。TI 提供这些资源并不会扩展或以其他方式更改 TI 针对 TI 产品发布的适用的担保或担保免责声明。

TI 反对并拒绝您可能提出的任何其他或不同的条款。

邮寄地址：Texas Instruments, Post Office Box 655303, Dallas, Texas 75265
Copyright © 2023，德州仪器 (TI) 公司