HiRel FPGAs

Features

- Highly Predictable Performance with 100% Automatic Placement and Routing
- Device Sizes from 1,200 to 20,000 Gates
- Up to 6 Fast, Low-Skew Clock Networks
- Up to 202 User-Programmable I/O Pins
- More Than 500 Macro Functions
- Up to 1,276 Dedicated Flip-Flops
- I/O Drive to 10 mA
- Devices Available to DSCC SMD
- CQFP and CPGA Packaging
- Nonvolatile, User Programmable
- Logic Fully Tested Prior to Shipment
- 100% Military Temperature Tested (–55°C to +125°C)
- QML Certified Devices
- Proven Reliability Data Available
- Successful Military/Avionics Supplier for Over 10 Years

ACT 3 Features

- Highest-Performance, Highest-Capacity FPGA Family
- System Performance to 60 MHz over Military Temperature
- Low-Power 0.8µ CMOS Technology

3200DX Features

- 100 MHz System Logic Integration
- Highest Speed FPGA SRAM, up to 2.5 kbits Configurable Dual-Port SRAM
- Fast Wide-Decode Circuitry
- Low-Power 0.6µ CMOS Technology

1200XL Features

- Pin for Pin Compatible with ACT 2
- System Performance to 50 MHz over Military Temperature
- Low-Power 0.6µ CMOS Technology

ACT 2 Features

- Best-Value, High-Capacity FPGA Family
- System Performance to 40 MHz over Military Temperature
- Low-Power 1.0µ CMOS Technology

ACT 1 Features

- Lowest-Cost FPGA Family
- System Performance to 20 MHz over Military Temperature
- Low-Power 1.0µ CMOS Technology

Product Family Profile (more devices on page 2)

Family	3200DX		ACT 3			1200XL
Device	A32100DX	A32200DX	A1425A	A1460A	A14100A	A1280XL
Capacity						
System Gates	15,000	30,000	3,750	9,000	15,000	12,000
Logic Gates	10,000	20,000	2,500	6,000	10,000	8,000
SRAM Bits	2,048	2,560	NA	NA	NA	
Logic Modules	1,362	2,414	310	848	1,377	1,232
S-Modules	700	1,230	160	432	697	624
C-Modules	662	1,184	150	416	680	608
Decode	20	24	NA	NA	NA	NA
Flip-Flops (Maximum)	738	1,276	435	976	1,493	998
User I/Os (Maximum)	152	202	100	168	228	140
Performance						
System Speed (maximum)	55 MHz	55 MHz	60 MHz	60 MHz	60 MHz	50 MHz
Packages (by Pin Count)						
CPGA			133	207	257	176
CQFP	84	208, 256	132	196	256	172

© 2000 Actel Corporation

Product Family Profile

Family	ACT 2		ACT 1	
Device	A1240A	A1280A	A1010B	A1020B
Capacity				
System Gates	6,000	12,000	1,800	3,000
Logic Gates	4,000	8,000	1,200	2,000
SRAM Bits	NA	NA	NA	NA
Logic Modules	684	1,232	295	547
S-Modules	348	624	—	—
C-Modules	336	608	295	547
Decode	NA	NA	NA	NA
Flip-Flops (maximum)	568	998	147	273
User I/Os (maximum)	104	140	57	69
Packages (by pin count)				
CPGA	132	176	84	84
CQFP	—	172	—	84
Performance				
System Speed (maximum)	40 MHz	40 MHz	20 MHz	20 MHz

High-Reliability, Low-Risk Solution

Actel builds the most reliable field programmable gate arrays (FPGAs) in the industry, with overall antifuse reliability ratings of less than 10 Failures-In-Time (FITs), corresponding to a useful life of more than 40 years. Actel FPGAs have been production proven, with more than five million devices shipped and more than one trillion antifuses manufactured. Actel devices are fully tested prior to shipment, with an outgoing defect level of less than 100 ppm. (Further reliability data is available in the *Actel Device Reliability Report*, at http://www.actel.com/hirel).

Benefits

Minimized Cost Risk

With Actel's line of development tools, designers can produce as many chips as they choose for just the cost of the device itself. There will be no NRE charges to cut into the development budget each time a new design is tried.

Minimized Time Risk

After the design is entered, placement and routing is automatic, and programming the device takes only about 5 to 15 minutes for an average design. Designers save time in the design entry process by using tools with which they are familiar.

Minimized Reliability Risk

The PLICE antifuse is a one-time programmable, nonvolatile connection. Since Actel devices are permanently programmed, no downloading from EPROM or SRAM storage is required. Inadvertent erasure is impossible, and there is no need to reload the program after power disruptions. Fabrication using a low-power CMOS process means cooler junction temperatures. Actel's non-PLD architecture delivers lower dynamic operating current. Our reliability tests show a very low failure rate of 6.6 FITs at 90°C junction temperature with no degradation in AC performance. Special stress testing at wafer test eliminates infant mortalities prior to packaging.

Minimized Security Risk

Reverse engineering of programmed Actel devices from optical or electrical data is extremely difficult. Programmed antifuses cannot be identified from a photograph or by using an SEM. The antifuse map cannot be deciphered either electrically or by microprobing. Each device has a silicon signature that identifies its origins, down to the wafer lot and fabrication facility.

Minimized Testing Risk

Unprogrammed Actel parts are extensively tested at the factory. Routing tracks, logic modules, and programming, debug and test circuits are 100 percent tested before shipment. AC performance is ensured by special speed path tests, and programming circuitry is verified on test antifuses. During the programming process, an algorithm is run to ensure that all antifuses are correctly programmed. In addition, Actel's Silicon Explorer diagnostic tool uses ActionProbe circuitry, allowing 100 percent observability of all internal nodes to check and debug the design.

Actel FPGA Description

The Actel families of FPGAs offer a variety of packages, speed/performance characteristics, and processing levels for use in all high reliability and military applications. Devices are implemented in a silicon gate, two-level metal CMOS process, utilizing Actel's PLICE antifuse technology. This

unique architecture offers gate array flexibility, high performance, and quick turnaround through user programming. Device utilization is typically 95 percent of available logic modules. All Actel devices include on-chip clock drivers and a hard-wired distribution network.

User-definable I/Os are capable of driving at both TTL and CMOS drive levels. Available packages for the military are the Ceramic Quad Flat Pack (CQFP) and the Ceramic Pin Grid Array (CPGA). See the "Product Plan" section on page 6 for details.

QML Certification

Actel has achieved full QML certification, demonstrating that quality management, procedures, processes, and controls are in place and comply with MIL-PRF-38535, the performance specification used by the Department of Defense for monolithic integrated circuits. QML certification is a good example of Actel's commitment to supplying the highest quality products for all types of high-reliability, military and space applications.

Many suppliers of microelectronics components have implemented QML as their primary worldwide business system. Appropriate use of this system not only helps in the implementation of advanced technologies, but also allows for a quality, reliable and cost-effective logistics support throughout QML products' life cycles.

Development Tool Support

The HiRel devices are fully supported by Actel's line of FPGA development tools, including the Actel DeskTOP series and Designer Advantage tools. The Actel DeskTOP Series is an integrated design environment for PCs that includes design entry, simulation, synthesis, and place and route tools. Designer Advantage is Actel's suite of FPGA development point tools for PCs and Workstations that includes the ACTgen Macro Builder, Designer with DirectTime timing driven place and route and analysis tools, and device programming software.

In addition, the HiRel devices contain ActionProbe circuitry that provides built-in access to every node in a design, enabling 100 percent real-time observation and analysis of a device's internal logic nodes without design iteration. The probe circuitry is accessed by Silicon Explorer, an easy to use integrated verification and logic analysis tool that can sample data at 100 MHz (asynchronous) or 66 MHz (synchronous). Silicon Explorer attaches to a PC's standard COM port, turning the PC into a fully functional 18 channel logic analyzer. Silicon Explorer allows designers to complete the design verification process at their desks and reduces verification time from several hours per cycle to a few seconds.

ACT 3 Description

The ACT 3 family is the third-generation Actel FPGA family. This family offers the highest-performance and highest-capacity devices, ranging from 2,500 to 10,000 gates, with system performance up to 60 MHz over the military temperature range. The devices have four clock distribution networks, including dedicated array and I/O clocks. In addition, the ACT 3 family offers the highest I/O-to-gate ratio available. ACT 3 devices are manufactured using 0.8µ CMOS technology.

1200XL/3200DX Description

3200DX and 1200XL FPGAs were designed to integrate system logic which is typically implemented in multiple CPLDs, PALs, and FPGAs. These devices provide the features and performance required for today's complex, high-speed digital logic systems. The 3200DX family offers the industry's fastest dual-port SRAM for implementing fast FIFOs, LIFOs, and temporary data storage.

ACT 2 Description

The ACT 2 family is the second-generation Actel FPGA family. This family offers the best-value, high-capacity devices, ranging from 4,000 to 8,000 gates, with system performance up to 40 MHz over the military temperature range. The devices have two routed array clock distribution networks. ACT 2 devices are manufactured using 1.0µ CMOS technology.

ACT 1 Description

The ACT 1 family is the first Actel FPGA family and the first antifuse-based FPGA. This family offers the lowest-cost logic integration, with devices ranging from 1,200 to 2,000 gates, with system performance up to 20 MHz over the military temperature range. The devices have one routed array clock distribution network. ACT 1 devices are manufactured using 1.0µ CMOS technology.

Military Device Ordering Information

A14100 A – 1 CQ 256 B

Application (Temperature Range)
- C = Commercial (0 to +70°C)
- M = Military (–55 to +125°C)
- B = MIL-STD-883 Class B
- E = Extended Flow (Space Level)

Package Lead Count

Package Type
- CQ = Ceramic Quad Flat Pack (CQFP)
- PG = Ceramic Pin Grid Array (CPGA)

Speed Grade
- Std = Standard Speed
- –1 = Approximately 15% faster than Standard

Device Revision

Part Number
- A1010 = 1,200 Gates—ACT 1
- A1020 = 2,000 Gates—ACT 1
- A1240 = 4,000 Gates—ACT 2
- A1280 = 8,000 Gates—ACT 2/1200XL
- A1425 = 2,500 Gates—ACT 3
- A1460 = 6,000 Gates—ACT 3
- A14100 = 10,000 Gates—ACT 3
- A32100 = 10,000 Gates—3200DX
- A32200 = 20,000 Gates—3200DX

DESC SMD/Actel Part Number Cross Reference

Actel Part Number (Gold Leads)	DSCC SMD (Gold Leads)	DSCC SMD (Solder Dipped)
A1010B-PG84B	5962-9096403MXC	5962-9096403MXA
A1010B-1PG84B	5962-9096404MXC	5962-9096404MXA
A1020B-PG84B	5962-9096503MUC	5962-9096503MUA
A1020B-1PG84B	5962-9096504MUC	5962-9096504MUA
A1020B-CQ84B	5962-9096503MTC	5962-9096503MTA
A1020B-1CQ84B	5962-9096504MTC	5962-9096504MTA
A1240A-PG132B	5962-9322101MXC	5962-9322101MXA
A1240A-1PG132B	5962-9322102MXC	5962-9322102MXA
A1280A-PG176B	5962-9215601MXC	5962-9215601MXA
A1280A-1PG176B	5962-9215602MXC	5962-9215602MXA
A1280A-CQ172B	5962-9215601MYC	5962-9215601MYA
A1280A-1CQ172B	5962-9215602MYC	5962-9215602MYA
A1425A-PG133B	5962-9552001MXC	N/A
A1425A-1PG133B	5962-9552002MXC	N/A
A1425A-CQ132B	5962-9552001MYC	N/A
A1425A-1CQ132B	5962-9552002MYC	N/A
A1460A-PG207B	5962-9550801MXC	N/A
A1460A-1PG207B	5962-9550802MXC	N/A
A1460A-CQ196B	5962-9550801MYC	N/A
A1460A-1CQ196B	5962-9550802MYC	N/A
A14100A-PG257B	5962-9552101MXC	N/A
A14100A-1PG257B	5962-9552102MXC	N/A
A14100A-CQ256B	5962-9552101MYC	N/A
A14100A-1CQ256B	5962-9552102MYC	N/A
A32100DX-CQ84B	5962-9875901QXC	N/A
A32100DX-1CQ84B	5962-9857902QXC	N/A
A32200DX-CQ256B	5962-9952701QXC	N/A
A32200DX-1CQ256B	5962-9952702QXC	N/A
A32200DX-CQ208B	5962-9952701QYC	N/A
A32200DX-1CQ208B	5962-9952702QYC	N/A

Product Plan

3200DX Family	Speed Grade		Application			
	Std	–1*	C	M	B	E
A32100DX Device						
84-pin Ceramic Quad Flat Pack (CQFP)	✔	✔	✔	✔	✔	—
A32200DX Device						
208-pin Ceramic Quad Flat Pack (CQFP)	✔	✔	✔	✔	✔	—
256-pin Ceramic Quad Flat Pack (CQFP)	✔	✔	✔	✔	✔	—
ACT 3 Family						
A1425A Device						
132-pin Ceramic Quad Flat Pack (CQFP)	✔	✔	✔	✔	✔	✔
133-pin Ceramic Pin Grid Array (CPGA)	✔	✔	✔	✔	✔	✔
A1460A Device						
196-pin Ceramic Quad Flat Pack (CQFP)	✔	✔	✔	✔	✔	✔
207-pin Ceramic Pin Grid Array (CPGA)	✔	✔	✔	✔	✔	✔
A14100A Device						
256-pin Ceramic Quad Flat Pack (CQFP)	✔	✔	✔	✔	✔	✔
257-pin Ceramic Pin Grid Array (CPGA)	✔	✔	✔	✔	✔	✔
1200XL Family						
A1280XL Device						
172-pin Ceramic Quad Flat Pack (CQFP)	✔	✔	✔	✔	✔	—
176-pin Ceramic Pin Grid Array (CPGA)	✔	✔	✔	✔	✔	—
ACT 2 Family						
A1240A Device						
132-pin Ceramic Pin Grid Array (CPGA)	✔	✔	✔	✔	✔	—
A1280A Device						
172-pin Ceramic Quad Flat Pack (CQFP)	✔	✔	✔	✔	✔	✔
176-pin Ceramic Pin Grid Array (CPGA)	✔	✔	✔	✔	✔	✔
ACT 1 Family						
A1010B Device						
84-pin Ceramic Pin Grid Array (CPGA)	✔	✔	✔	✔	✔	—
A1020B Device						
84-pin Ceramic Quad Flat Pack (CQFP)	✔	✔	✔	✔	✔	✔
84-pin Ceramic Pin Grid Array (CPGA)	✔	✔	✔	✔	✔	✔

Applications: *C = Commercial*, *M = Military*, *B = MIL-STD-883*, *E = Extended Flow*

Availability: ✔ = *Available*, — = *Not Planned*

**Speed Grade:* *–1 = Approx. 15% faster than Standard*

3200DX Device Resources

FPGA Device Type	Logic Modules	Gate Array Equivalent Gates	User I/Os CQFP 84-pin	208-pin	256-pin
A32100DX	1,362	10,000	60	—	—
A32200DX	2,414	20,000	—	176	202

ACT 3 Device Resources

FPGA Device Type	Logic Modules	Gate Array Equivalent Gates	User I/Os CQFP 132-pin	196-pin	256-pin	CPGA 133-pin	207-pin	257-pin
A1425A	310	2,500	100	—	—	100	—	—
A1460A	848	6,000	—	168	—	—	168	—
A14100A	1,377	10,000	—	—	228	—	—	228

1200XL Device Resources

FPGA Device Type	Logic Modules	Gate Array Equivalent Gates	User I/Os CQFP 172-pin	CPGA 176-pin
A1280XL	1,232	8,000	140	140

ACT 2 Device Resources

FPGA Device Type	Logic Modules	Gate Array Equivalent Gates	User I/Os CQFP 172-pin	CPGA 132-pin	176-pin
A1240A	684	4,000	—	104	—
A1280A	1,232	8,000	140	—	140

ACT 1 Device Resources

FPGA Device Type	Logic Modules	Gate Array Equivalent Gates	User I/Os CQFP 84-pin	CPGA 84-pin
A1010B	295	1,200	—	57
A1020B	547	2,000	69	69

Actel MIL-STD-883 Product Flow

Step	Screen	883 Method	883—Class B Requirement
1.	Internal Visual	2010, Test Condition B	100%
2.	Temperature Cycling	1010, Test Condition C	100%
3.	Constant Acceleration	2001, Test Condition D or E, Y_1, Orientation Only	100%
4.	Seal a. Fine b. Gross	1014	 100% 100%
5.	Visual Inspection	2009	100%
6.	Pre-Burn-In Electrical Parameters	In accordance with applicable Actel device specification	100%
7.	Burn-in Test	1015, Condition D, 160 hours @ 125°C or 80 hours @ 150°C	100%
8.	Interim (Post-Burn-In) Electrical Parameters	In accordance with applicable Actel device specification	100%
9.	Percent Defective Allowable	5%	All Lots
10.	Final Electrical Test	In accordance with applicable Actel device specification, which includes a, b, and c:	
	a. Static Tests (1) 25°C (Subgroup 1, Table I) (2) –55°C and +125°C (Subgroups 2, 3, Table I)	 5005 5005	100%
	b. Functional Tests (1) 25°C (Subgroup 7, Table I) (2) –55°C and +125°C (Subgroups 8A and 8B, Table I)	 5005 5005	100%
	c. Switching Tests at 25°C (Subgroup 9, Table I)	 5005	100%
11.	External Visual	2009	100%

Note: *When Destructive Physical Analysis (DPA) is performed on Class B devices, the step coverage requirement as specified in Method 2018 must be waived.*

Actel Extended Flow[1]

Step	Screen	Method	Requirement
1.	Wafer Lot Acceptance[2]	5007 with Step Coverage Waiver	All Lots
2.	Destructive In-Line Bond Pull[3]	2011, Condition D	Sample
3.	Internal Visual	2010, Condition A	100%
4.	Serialization		100%
5.	Temperature Cycling	1010, Condition C	100%
6.	Constant Acceleration	2001, Condition D or E, Y_1 Orientation Only	100%
7.	Particle Impact Noise Detection	2020, Condition A	100%
8.	Radiographic	2012 (one view only)	100%
9.	Pre-Burn-In Test	In accordance with applicable Actel device specification	100%
10.	Burn-in Test	1015, Condition D, 240 hours @ 125°C minimum	100%
11.	Interim (Post-Burn-In) Electrical Parameters	In accordance with applicable Actel device specification	100%
12.	Reverse Bias Burn-In	1015, Condition C, 72 hours @ 150°C minimum	100%
13.	Interim (Post-Burn-In) Electrical Parameters	In accordance with applicable Actel device specification	100%
14.	Percent Defective Allowable (PDA) Calculation	5%, 3% Functional Parameters @ 25°C	All Lots
15.	Final Electrical Test	In accordance with Actel applicable device specification which includes a, b, and c:	100%
	a. Static Tests		100%
	(1) 25°C (Subgroup 1, Table1)	5005	
	(2) –55°C and +125°C (Subgroups 2, 3, Table 1)	5005	
	b. Functional Tests		100%
	(1) 25°C (Subgroup 7, Table 15)	5005	
	(2) –55°C and +125°C (Subgroups 8A and B, Table 1)	5005	
	c. Switching Tests at 25°C (Subgroup 9, Table 1)	5005	100%
16.	Seal	1014	100%
	a. Fine		
	b. Gross		
17.	External Visual	2009	100%

Notes:

1. *Actel offers the extended flow for customers who require additional screening beyond the requirements of the MIL-STD-833, Class B. Actel is compliant to the requirements of MIL-STD-883, Paragraph 1.2.1, and MIL-I-38535, Appendix A. Actel is offering this extended flow incorporating the majority of the screening procedures as outlined in Method 5004 of MIL-STD-883, Class S. The exceptions to Method 5004 are shown in notes 2 and 3 below.*
2. *Wafer lot acceptance is performed to Method 5007; however, the step coverage requirement as specified in Method 2018 must be waived.*
3. *MIL-STD-883, Method 5004 requires 100 percent Radiation latch-up testing (Method 1020). Actel will not be performing any radiation testing, and this requirement must be waived in its entirety.*

Absolute Maximum Ratings[1]

Free air temperature range

Symbol	Parameter	Limits	Units
V_{CC}	DC Supply Voltage[2, 3, 4]	–0.5 to +7.0	V
V_I	Input Voltage	–0.5 to V_{CC} +0.5	V
V_O	Output Voltage	–0.5 to V_{CC} +0.5	V
I_{IO}	I/O Source Sink Current[5]	±20	mA
T_{STG}	Storage Temperature	–65 to +150	°C

Notes:

1. *Stresses beyond those listed under "Absolute Maximum Ratings" may cause permanent damage to the device. Exposure to absolute maximum rated conditions for extended periods may affect device reliability. Devices should not be operated outside the recommended operating conditions.*
2. *$V_{PP} = V_{CC}$, except during device programming.*
3. *$V_{SV} = V_{CC}$, except during device programming.*
4. *$V_{KS} = GND$, except during device programming.*
5. *Device inputs are normally high impedance and draw extremely low current. However, when input voltage is greater than V_{CC} + 0.5V or less than GND – 0.5V, the internal protection diode will be forward biased and can draw excessive current.*

Recommended Operating Conditions

Parameter	Commercial	Military	Units
Temperature Range[1]	0 to +70	–55 to +125	°C
Power Supply Tolerance[2]	±5	±10	%V_{CC}

Notes:

1. *Ambient temperature (T_A) is used for commercial and industrial; case temperature (T_C) is used for military.*
2. *All power supplies must be in the recommended operating range. For more information, refer to the* Power-Up Design Considerations *application note at http://www.actel.com/appnotes.*

Electrical Specifications

Symbol	Parameter	Test Condition	Commercial Min.	Commercial Max.	Military Min.	Military Max.	Units
V_{OH}[1, 2]	HIGH Level Output	I_{OH} = –4 mA (CMOS)			3.7		V
		I_{OH} = –6 mA (CMOS)	3.84				V
V_{OL}[1, 2]	LOW Level Output	I_{OL} = +6 mA (CMOS)		0.33		0.4	V
V_{IH}	HIGH Level Input	TTL Inputs	2.0	V_{CC} + 0.3	2.0	V_{CC} + 0.3	V
V_{IL}	LOW Level Input	TTL Inputs	–0.3	0.8	–0.3	0.8	V
I_{IN}	Input Leakage	$V_I = V_{CC}$ or GND	–10	+10	–10	+10	µA
I_{OZ}	3-state Output Leakage	$V_O = V_{CC}$ or GND	–10	+10	–10	+10	µA
C_{IO}	I/O Capacitance[3, 4]			10		10	pF
$I_{CC(S)}$	Standby V_{CC} Supply Current	$V_I = V_{CC}$ or GND, I_O = 0 mA					
		ACT 1		3		20	mA
		ACT 2/3/1200XL/3200DX		2		20	mA
$I_{CC(D)}$	Dynamic V_{CC} Supply Current	See the "Power Dissipation" section on page 11.					

Notes:

1. *Actel devices can drive and receive either CMOS or TTL signal levels. No assignment of I/Os as TTL or CMOS is required.*
2. *Tested one output at a time, V_{CC} = min.*
3. *Not tested; for information only.*
4. *V_{OUT} = 0V, f = 1 MHz*

Package Thermal Characteristics

The device junction to case thermal characteristic is θ_{jc}, and the junction to ambient air characteristic is θ_{ja}. The thermal characteristics for θ_{ja} are shown with two different air flow rates.

Maximum junction temperature is 150°C.

A sample calculation of the absolute maximum power dissipation allowed for a CPGA 176-pin package at military temperature is as follows:

$$\frac{\text{Max. junction temp. (°C)} - \text{Max. military temp.}}{\theta_{ja}\ (°C/W)} = \frac{150°C - 125°C}{23°C/W} = 1.1\ W$$

Package Type	Pin Count	θ_{jc}	θ_{ja} Still Air	θ_{ja} 300 ft/min	Units
Ceramic Pin Grid Array	84	6.0	33	20	°C/W
	132	4.8	25	16	°C/W
	133	4.8	25	15	°C/W
	176	4.6	23	12	°C/W
	207	3.5	21	10	°C/W
	257	2.8	15	8	°C/W
Ceramic Quad Flat Pack	84	7.8	40	30	°C/W
	132	7.2	35	25	°C/W
	172	6.8	25	20	°C/W
	196	6.4	23	15	°C/W
	256	6.2	20	10	°C/W

Power Dissipation

General Power Equation

$$P = [I_{CC}\text{standby} + I_{CC}\text{active}] * V_{CC} + I_{OL} * V_{OL} * N + I_{OH} * (V_{CC} - V_{OH}) * M$$

where:

I_{CC}standby is the current flowing when no inputs or outputs are changing.

I_{CC}active is the current flowing due to CMOS switching.

I_{OL}, I_{OH} are TTL sink/source currents.

V_{OL}, V_{OH} are TTL level output voltages.

N equals the number of outputs driving TTL loads to V_{OL}.

M equals the number of outputs driving TTL loads to V_{OH}.

Accurate values for N and M are difficult to determine because they depend on the family type, on the design, and on the system I/O. The power can be divided into two components—static and active.

Static Power Component

Actel FPGAs have small static power components that result in power dissipation lower than that of PALs or PLDs. By integrating multiple PALs or PLDs into one FPGA, an even greater reduction in board-level power dissipation can be achieved.

The power due to standby current is typically a small component of the overall power. Standby power is calculated below for commercial, worst-case conditions.

Family	I_{CC}	V_{CC}	Power
ACT 3	2 mA	5.25V	10.5 mW
1200XL/3200DX	2 mA	5.25V	10.5 mW
ACT 2	2 mA	5.25V	10.5 mW
ACT 1	3 mA	5.25V	15.8 mW

The static power dissipated by TTL loads depends on the number of outputs driving high or low and the DC load current. Again, this value is typically small. For instance, a 32-bit bus sinking 4 mA at 0.33V will generate 42 mW with all outputs driving low, and 140 mW with all outputs driving high.

Active Power Component

Power dissipation in CMOS devices is usually dominated by the active (dynamic) power dissipation. This component is frequency dependent, a function of the logic and the external I/O. Active power dissipation results from charging internal chip capacitances of the interconnect, unprogrammed antifuses, module inputs, and module outputs, plus external capacitance due to PC board traces and load device inputs. An additional component of the active power dissipation is the totempole current in CMOS transistor pairs. The net effect can be associated with an equivalent capacitance that

can be combined with frequency and voltage to represent active power dissipation.

Equivalent Capacitance

The power dissipated by a CMOS circuit can be expressed by Equation 1:

$$\text{Power (uW)} = C_{EQ} * V_{CC}^2 * F \quad (1)$$

where:

C_{EQ} = Equivalent capacitance in pF

V_{CC} = Power supply in volts (V)

F = Switching frequency in MHz

Equivalent capacitance is calculated by measuring I_{CC}active at a specified frequency and voltage for each circuit component of interest. Measurements are made over a range of frequencies at a fixed value of V_{CC}. Equivalent capacitance is frequency independent so that the results can be used over a wide range of operating conditions. Equivalent capacitance values are shown below.

CEQ Values for Actel FPGAs

	ACT 3	1200XL 3200DX	ACT 2	ACT 1
Modules (C_{EQM})	6.7	5.2	5.8	3.7
Input Buffers (C_{EQI})	7.2	11.6	12.9	22.1
Output Buffers (C_{EQO})	10.4	23.8	23.8	31.2
Routed Array Clock Buffer Loads (C_{EQCR})	1.6	3.5	3.9	4.6
Dedicated Clock Buffer Loads (C_{EQCD})	0.7	N/A	N/A	N/A
I/O Clock Buffer Loads (C_{EQCI})	0.9	N/A	N/A	N/A

To calculate the active power dissipated from the complete design, the switching frequency of each part of the logic must be known. Equation 2 shows a piecewise linear summation over all components that applies to all ACT 1, 1200XL, 3200DX, ACT 2, and ACT 3 devices. Since the ACT 1 family has only one routed array clock, the terms labeled routed_Clk2, dedicated_Clk, and IO_Clk do not apply. Similarly, the ACT 2 family has two routed array clocks, and the dedicated_Clk and IO_Clk terms do not apply. For ACT 3 devices, all terms will apply.

$$\text{Power} = V_{CC}^2 * [(m * C_{EQM} * f_m)_{modules} + (n * C_{EQI} * f_n)_{inputs} + (p * (C_{EQO} + C_L) * f_p)_{outputs} + 0.5 * (q_1 * C_{EQCR} * f_{q1})_{routed_Clk1} + (r_1 * f_{q1})_{routed_Clk1} + 0.5 * (q_2 * C_{EQCR} * f_{q2})_{routed_Clk2} + (r_2 * f_{q2})_{routed_Clk2} + 0.5 * (s_1 * C_{EQCD} * f_{s1})_{dedicated_Clk} + (s_2 * C_{EQCI} * f_{s2})_{IO_Clk}] \quad (2)$$

where:

m = Number of logic modules switching at f_m

n = Number of input buffers switching at f_n

p = Number of output buffers switching at f_p

q_1 = Number of clock loads on the first routed array clock (all families)

q_2 = Number of clock loads on the second routed array clock (ACT 2, 1200XL, 3200DX, ACT 3 only)

r_1 = Fixed capacitance due to first routed array clock (all families)

r_2 = Fixed capacitance due to second routed array clock (ACT 2, 1200XL, 3200DX, ACT 3 only)

s_1 = Fixed number of clock loads on the dedicated array clock (ACT 3 only)

s_2 = Fixed number of clock loads on the dedicated I/O clock (ACT 3 only)

C_{EQM} = Equivalent capacitance of logic modules in pF

C_{EQI} = Equivalent capacitance of input buffers in pF

C_{EQO} = Equivalent capacitance of output buffers in pF

C_{EQCR} = Equivalent capacitance of routed array clock in pF

C_{EQCD} = Equivalent capacitance of dedicated array clock in pF

C_{EQCI} = Equivalent capacitance of dedicated I/O clock in pF

C_L = Output lead capacitance in pF

f_m = Average logic module switching rate in MHz

f_n = Average input buffer switching rate in MHz

f_p = Average output buffer switching rate in MHz

f_{q1} = Average first routed array clock rate in MHz (all families)

f_{q2} = Average second routed array clock rate in MHz (ACT 2, 1200XL, 3200DX, ACT 3 only)

f_{s1} = Average dedicated array clock rate in MHz (ACT 3 only)

f_{s2} = Average dedicated I/O clock rate in MHz (ACT 3 only)

Fixed Capacitance Values for Actel FPGAs (pF)

Device Type	r_1 routed_Clk1	r_2 routed_Clk2
A1010B	41	n/a
A1020B	69	n/a
A1240A	134	134
A1280A	168	168
A1280XL	168	168
A1425A	75	75
A1460A	165	165
A14100A	195	195
A32100DX	178	178
A32200DX	230	230

Fixed Clock Loads (s_1/s_2—ACT 3 Only)

Device Type	s_1 Clock Loads on Dedicated Array Clock	s_2 Clock Loads on Dedicated I/O Clock
A1425A	160	100
A1460A	432	168
A14100A	697	228

Determining Average Switching Frequency

To determine the switching frequency for a design, you must have a detailed understanding of the data values input to the circuit. The guidelines in the table below are meant to represent worst-case scenarios so that they can be generally used to predict the upper limits of power dissipation.

Type	ACT 3	3200DX/ACT 2/1200XL	ACT 1
Logic modules (m)	80% of modules	80% of modules	90% of modules
Input switching (n)	# inputs/4	# inputs/4	# inputs/4
Outputs switching (p)	#outputs/4	#outputs/4	#outputs/4
First routed array clock loads (q_1)	40% of sequential modules	40% of sequential modules	40% of modules
Second routed array clock loads (q_2)	40% of sequential modules	40% of sequential modules	n/a
Load capacitance (C_L)	35 pF	35 pF	35 pF
Average logic module switching rate (f_m)	F/10	F/10	F/10
Average input switching rate (f_n)	F/5	F/5	F/5
Average output switching rate (f_p)	F/10	F/10	F/10
Average first routed array clock rate (f_{q1})	F/2	F	F
Average second routed array clock rate (f_{q2})	F/2	F/2	n/a
Average dedicated array clock rate (f_{s1})	F	n/a	n/a
Average dedicated I/O clock rate (f_{s2})	F	n/a	n/a

3200DX Timing Model (Logic Functions using Array Clocks)*

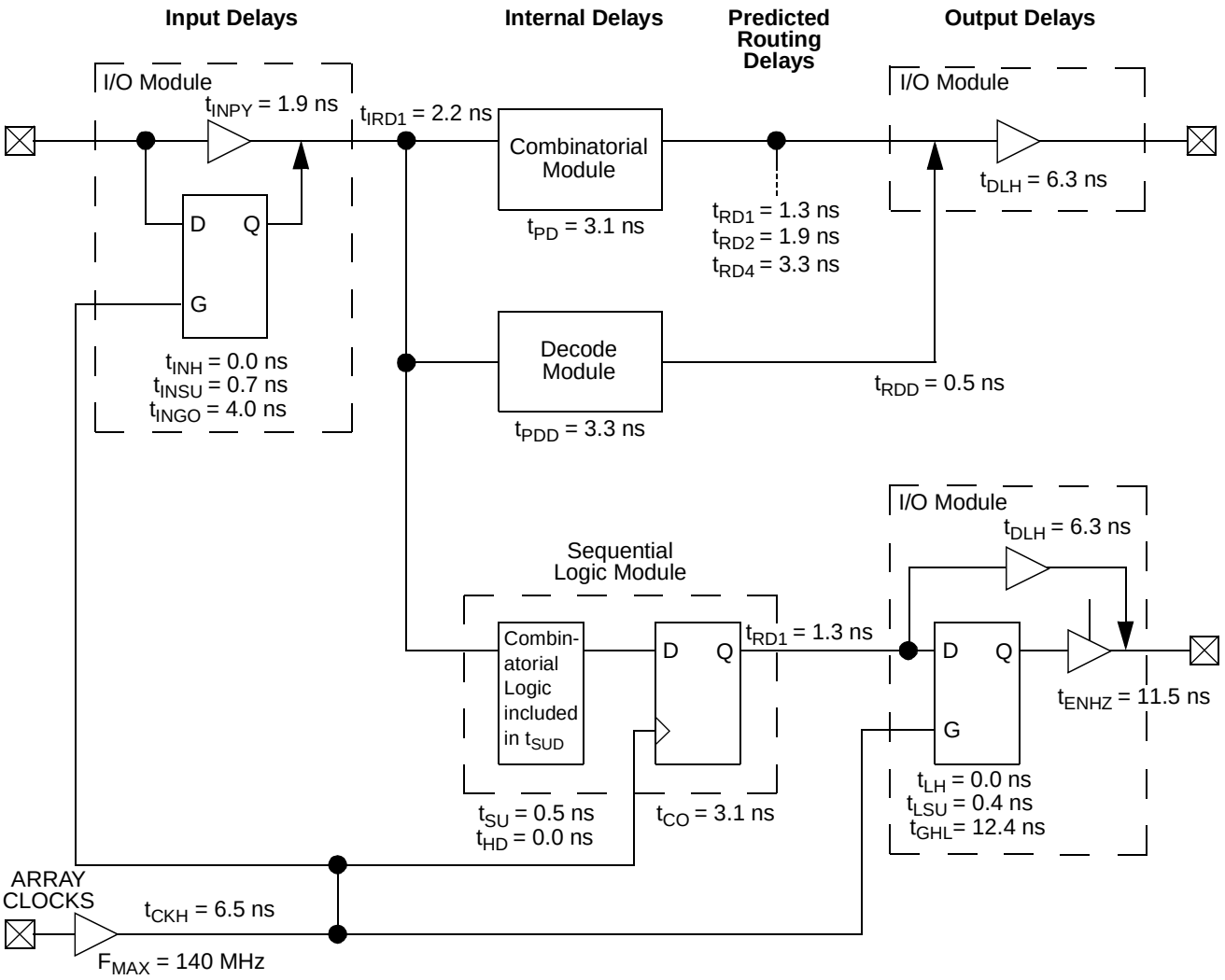

**Values shown for A32100DX–1 at worst-case military conditions.*

3200DX Timing Model (Logic Functions using Quadrant Clocks)*

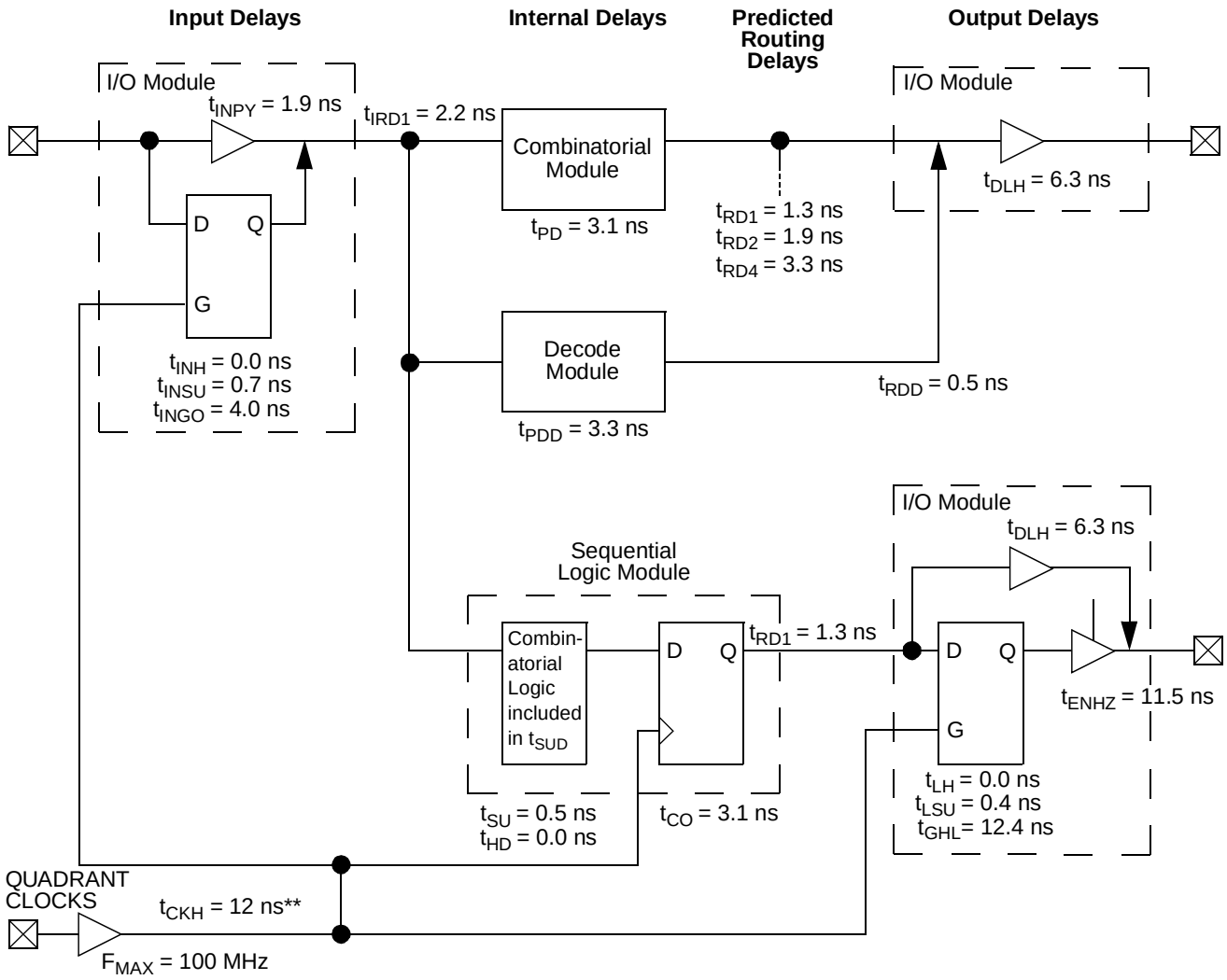

** Values shown for A32100DX–1 at worst-case military conditions.*

*** Load dependent.*

3200DX Timing Model (SRAM Functions)*

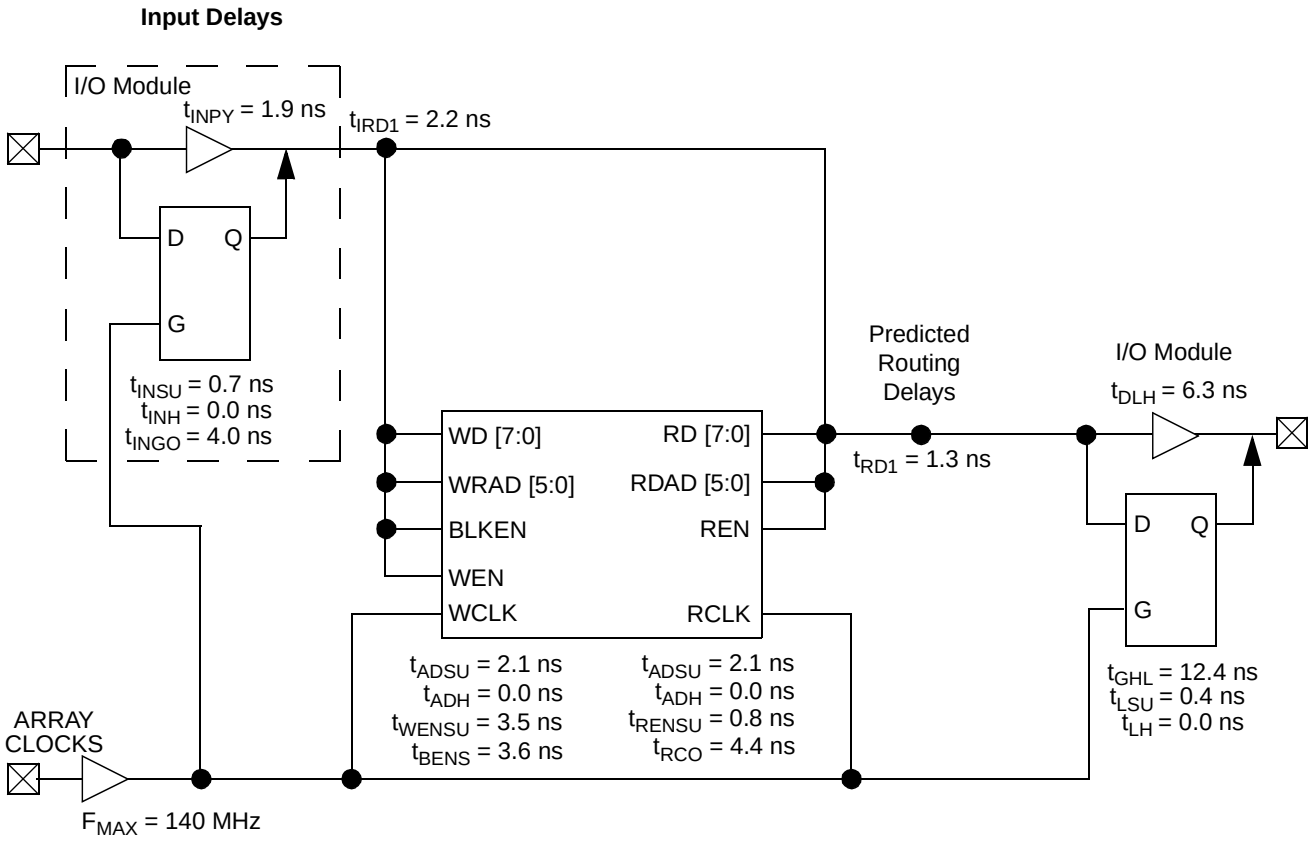

**Values shown for A32100DX–1 at worst-case military conditions.*

1200XL Timing Model*

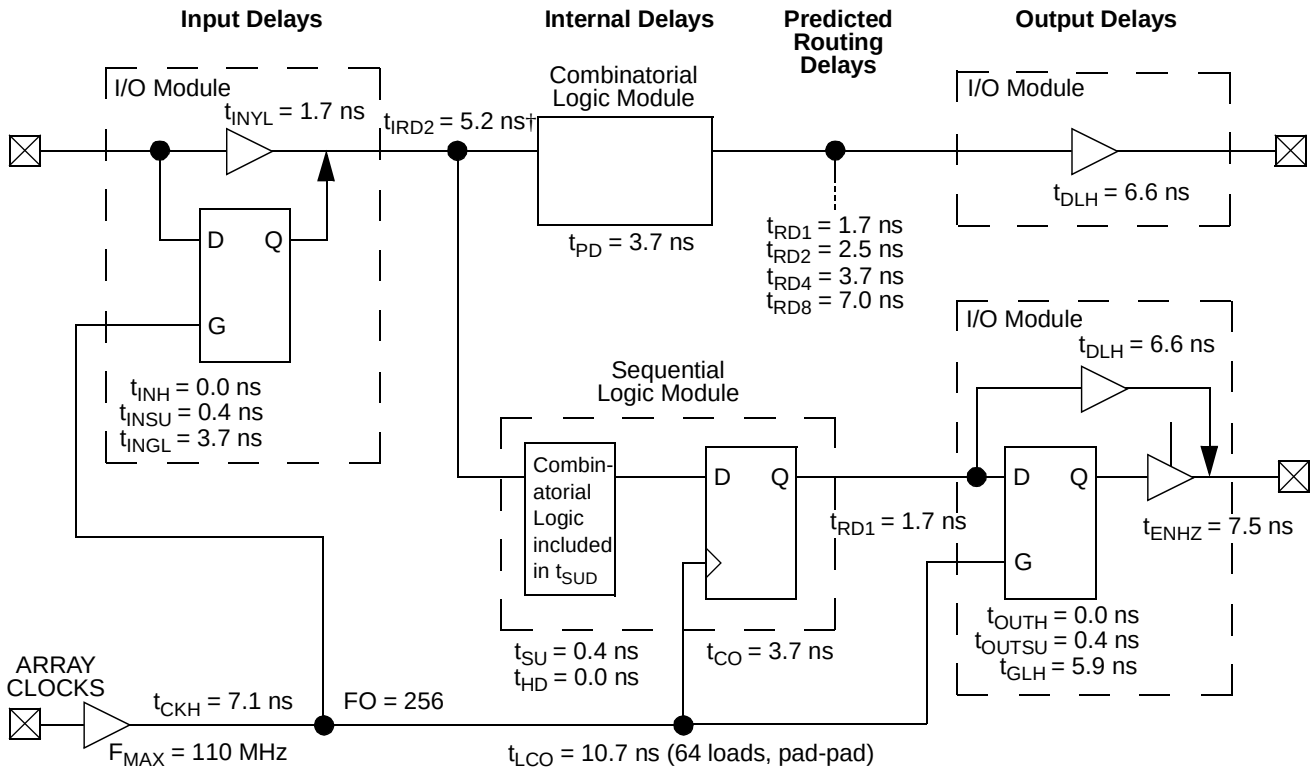

**Values shown for A1280XL–1 at worst-case military conditions.*

† Input module predicted routing delay.

Parameter Measurement

Output Buffer Delays

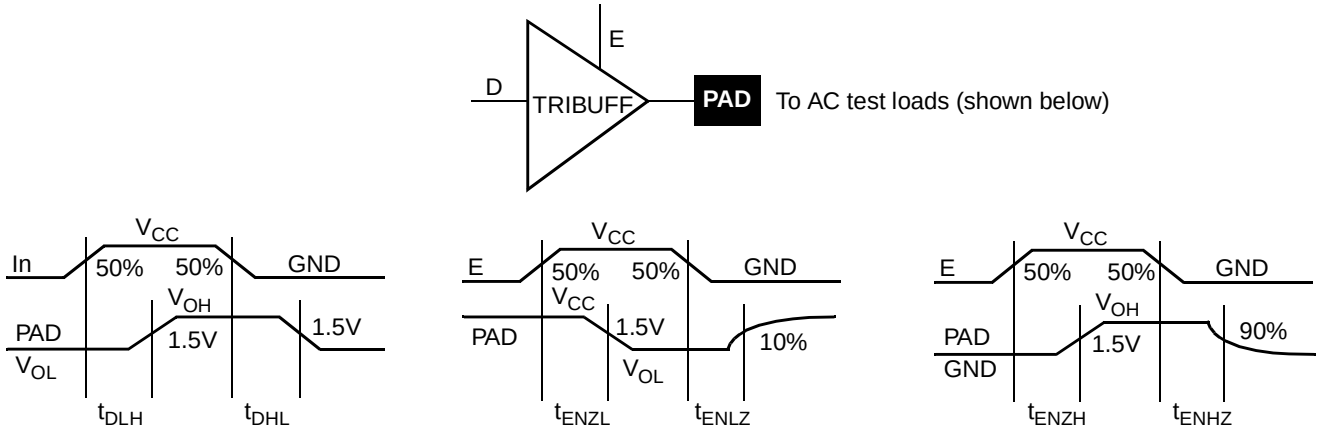

AC Test Load

Load 1
(Used to measure propagation delay)

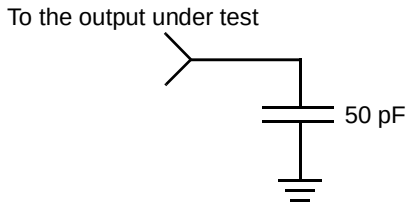

Load 2
(Used to measure rising/falling edges)

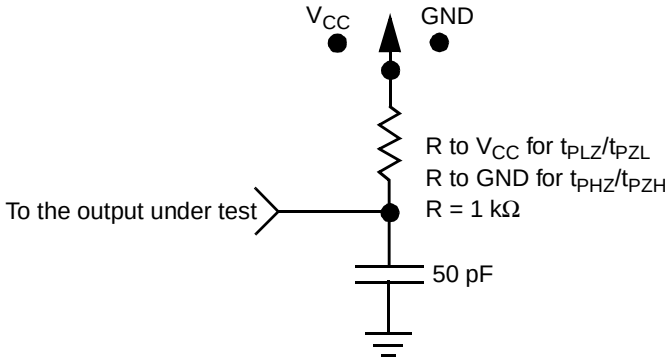

Input Buffer Delays

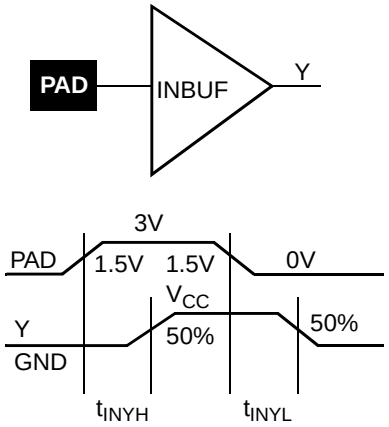

Combinatorial Macro Delays

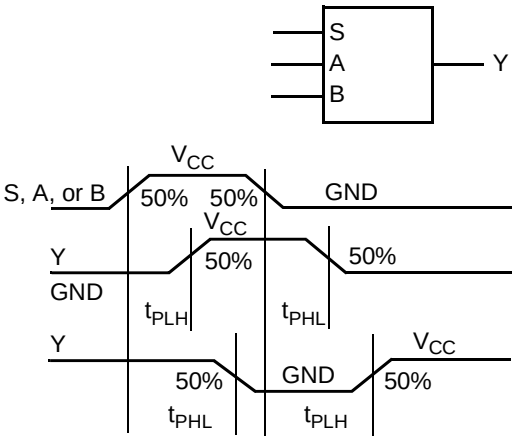

Sequential Timing Characteristics

Flip-Flops and Latches (ACT 3)

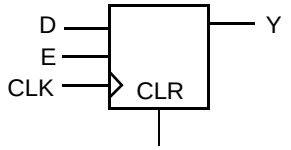

(Positive edge triggered)

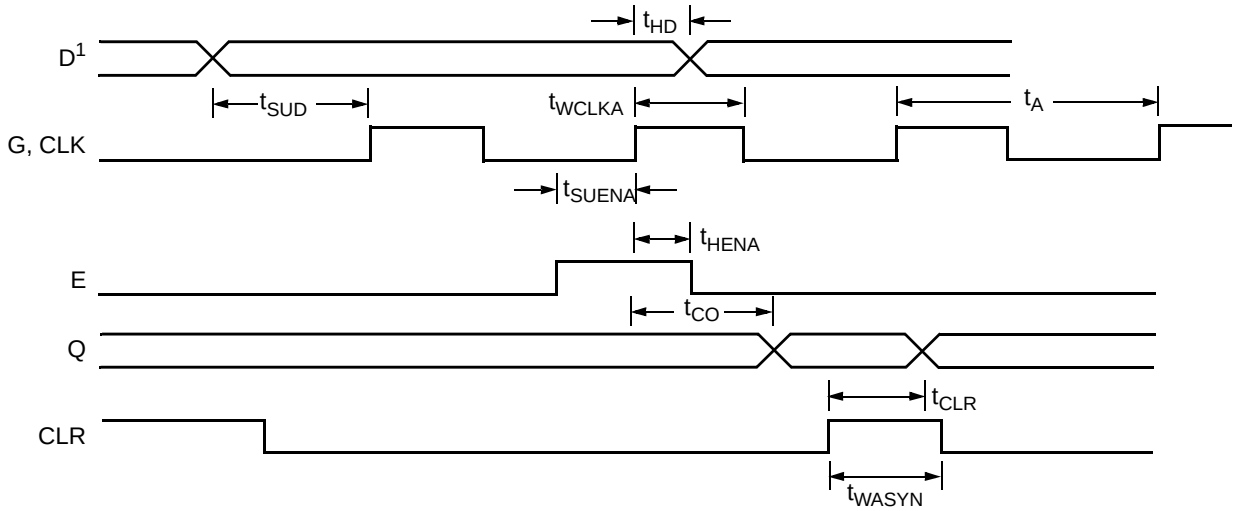

Note:

1. D represents all data functions involving A, B, and S for multiplexed flip-flops.

Sequential Timing Characteristics (continued)

Flip-Flops and Latches (1200XL/3200DX, ACT 2, and ACT 1)

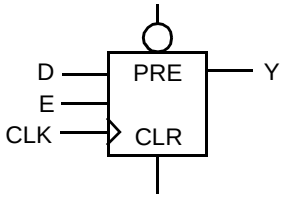

(Positive edge triggered)

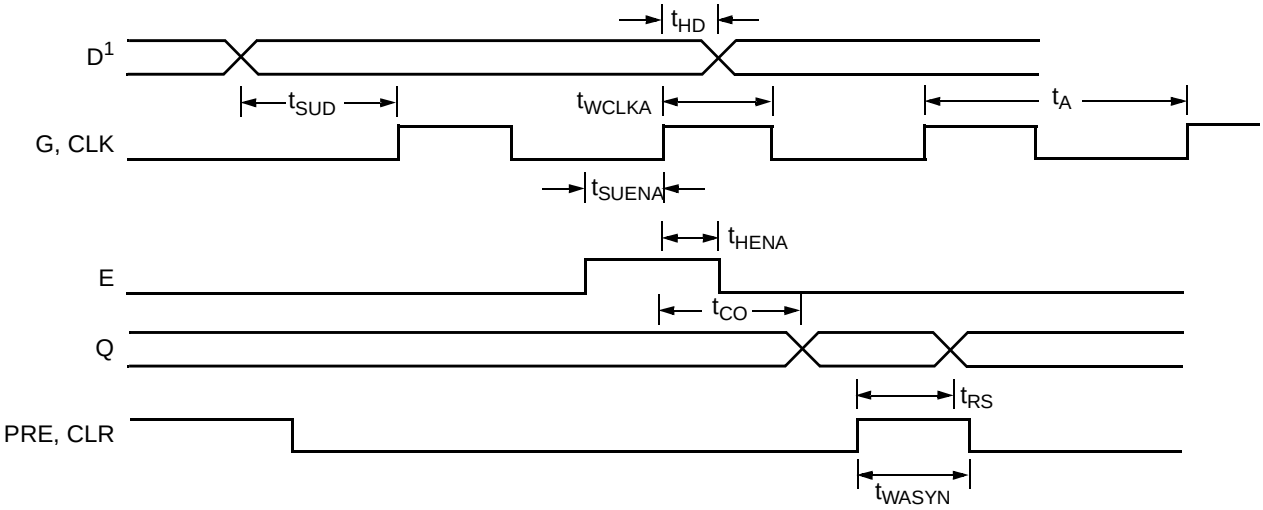

Note:

1. D represents all data functions involving A, B, and S for multiplexed flip-flops.

Sequential Timing Characteristics (continued)

Input Buffer Latches (ACT 2 and 1200XL/3200DX)

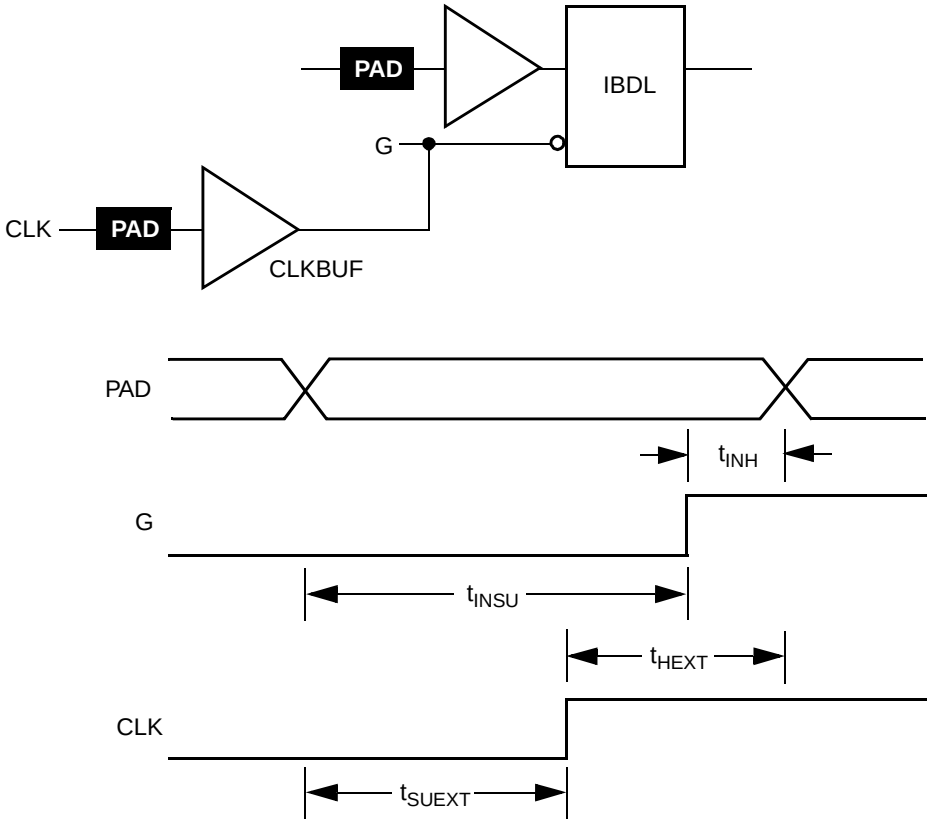

Output Buffer Latches (ACT 2 and 1200XL/3200DX)

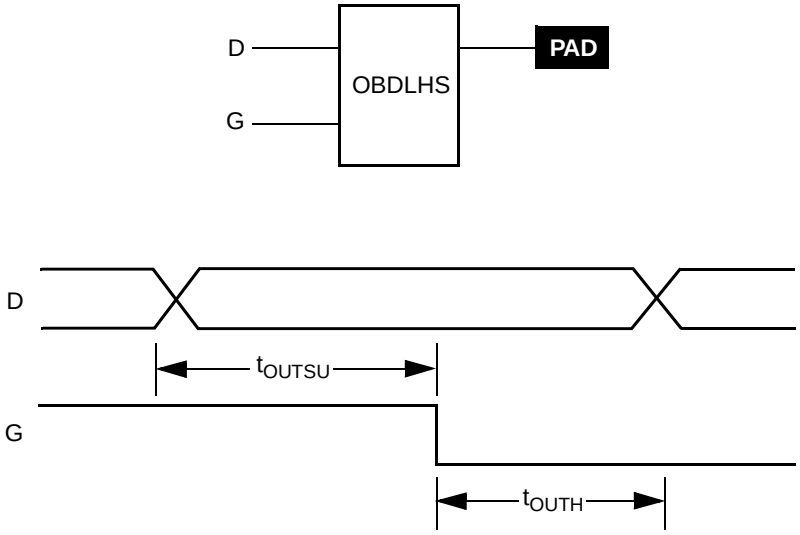

Decode Module Timing

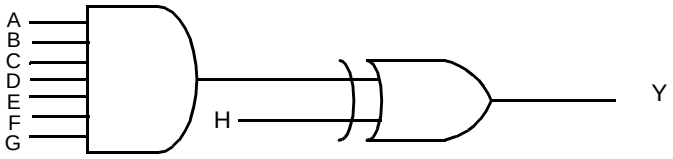

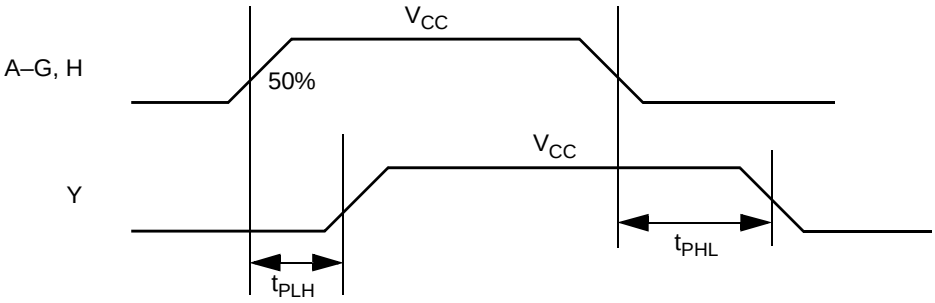

SRAM Timing Characteristics

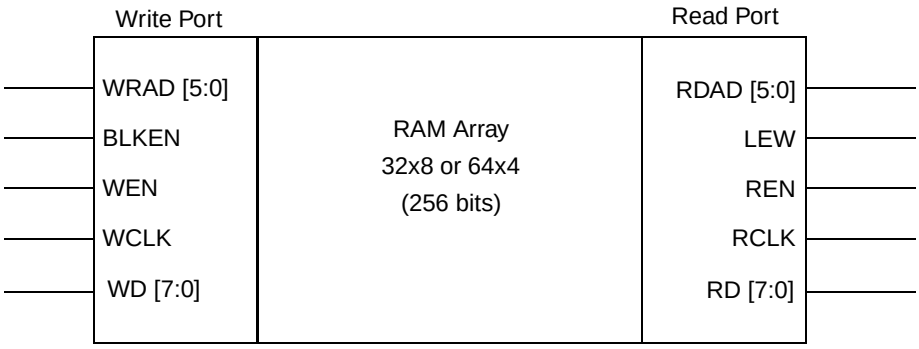

Dual-Port SRAM Timing Waveforms

3200DX SRAM Write Operation

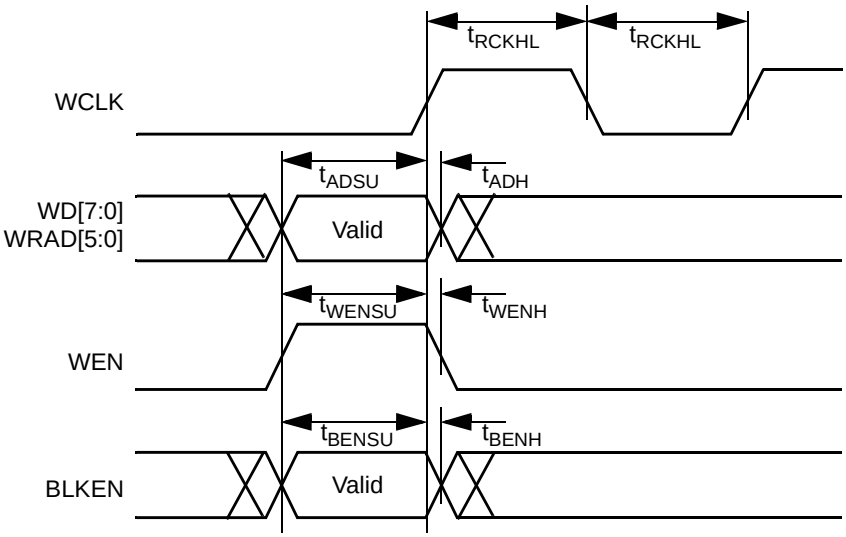

Note: *Identical timing for falling-edge clock.*

3200DX SRAM Synchronous Read Operation

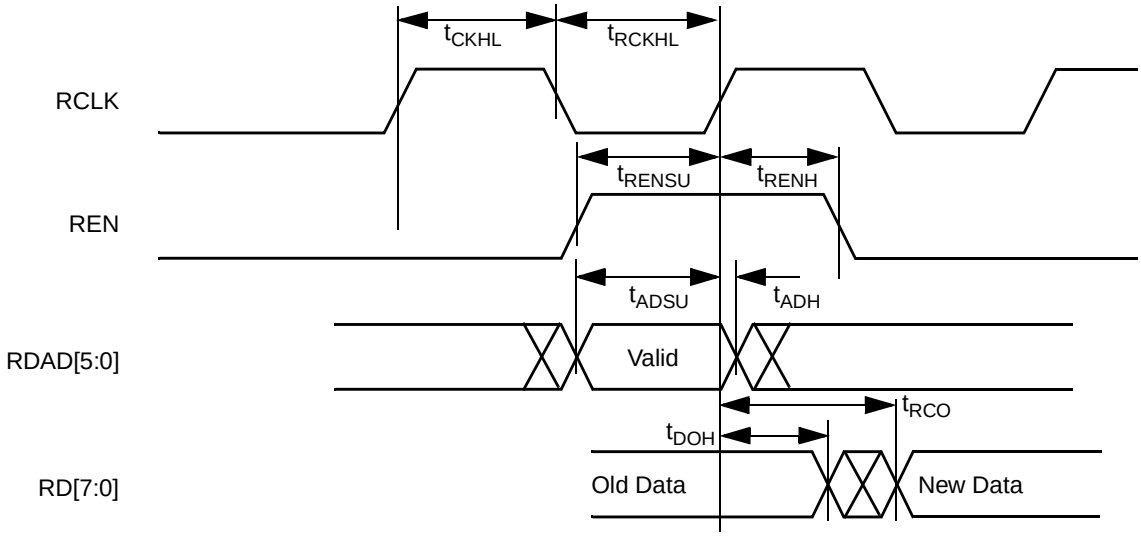

Note: *Identical timing for falling-edge clock.*

3200DX SRAM Asynchronous Read Operation—Type 1

(Read Address Controlled)

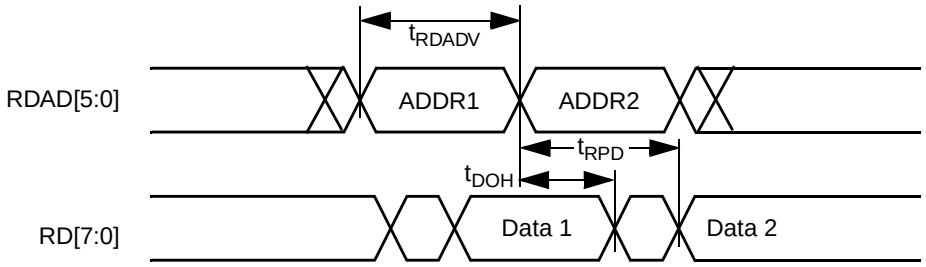

3200DX SRAM Asynchronous Read Operation—Type 2

(Write Address Controlled)

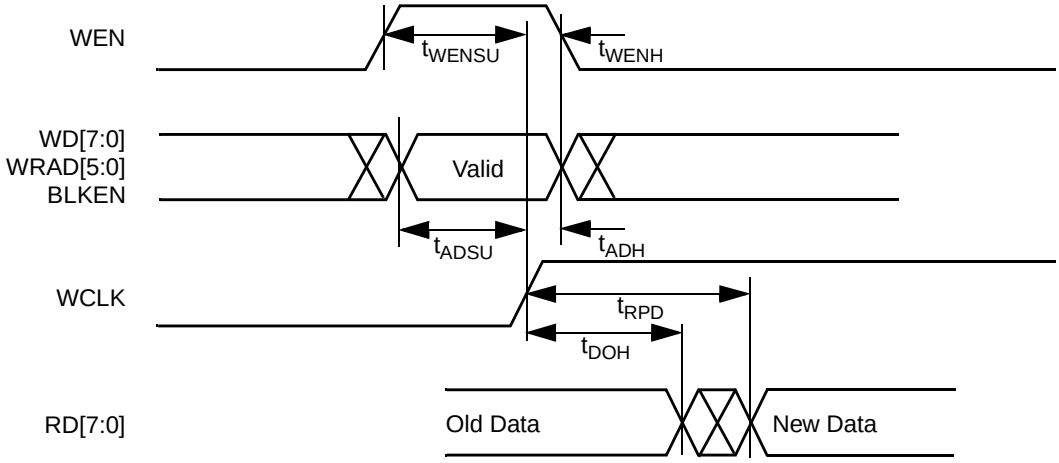

ACT 1 Timing Characteristics

(Worst-Case Military Conditions, V_{CC} = 4.5V, T_J = 125°C)

		'–1' Speed		'Std' Speed		
Parameter	**Description**	**Min.**	**Max.**	**Min.**	**Max.**	**Units**
Logic Module Propagation Delays						
t_{PD1}	Single Module		4.7		5.5	ns
t_{PD2}	Dual Module Macros		10.8		12.7	ns
t_{CO}	Sequential Clk to Q		4.7		5.5	ns
t_{GO}	Latch G to Q		4.7		5.5	ns
t_{RS}	Flip-Flop (Latch) Reset to Q		4.7		5.5	ns
Logic Module Predicted Routing Delays[1]						
t_{RD1}	FO=1 Routing Delay		1.5		1.7	ns
t_{RD2}	FO=2 Routing Delay		2.3		2.7	ns
t_{RD3}	FO=3 Routing Delay		3.4		4.0	ns
t_{RD4}	FO=4 Routing Delay		5.0		5.9	ns
t_{RD8}	FO=8 Routing Delay		10.6		12.5	ns
Logic Module Sequential Timing [2]						
t_{SUD}	Flip-Flop (Latch) Data Input Setup	8.8		10.4		ns
t_{HD}	Flip-Flop (Latch) Data Input Hold	0.0		0.0		ns
t_{SUENA}	Flip-Flop (Latch) Enable Setup	8.8		10.4		ns
t_{HENA}	Flip-Flop (Latch) Enable Hold	0.0		0.0		ns
t_{WCLKA}	Flip-Flop (Latch) Clock Active Pulse Width	10.9		12.9		ns
t_{WASYN}	Flip-Flop (Latch) Asynchronous Pulse Width	10.9		12.9		ns
t_A	Flip-Flop Clock Input Period	23.2		27.3		ns
f_{MAX}	Flip-Flop (Latch) Clock Frequency		44		37	MHz
Input Module Propagation Delays						
t_{INYH}	Pad to Y High		4.9		5.8	ns
t_{INYL}	Pad to Y Low		4.9		5.8	ns
Input Module Predicted Routing Delays[1, 3]						
t_{IRD1}	FO=1 Routing Delay		1.5		1.7	ns
t_{IRD2}	FO=2 Routing Delay		2.3		2.7	ns
t_{IRD3}	FO=3 Routing Delay		3.4		4.0	ns
t_{IRD4}	FO=4 Routing Delay		5.0		5.9	ns
t_{IRD8}	FO=8 Routing Delay		10.6		12.5	ns

Notes:

1. *Routing delays are for typical designs across worst-case operating conditions. These parameters should be used for estimating device performance. Post-route timing analysis or simulation is required to determine actual worst-case performance. Post-route timing is based on actual routing delay measurements performed on the device prior to shipment.*
2. *Setup times assume fanout of 3. Further derating information can be obtained from the DirectTime Analyzer utility.*
3. *Optimization techniques may further reduce delays by 0 to 4 ns.*

ACT 1 Timing Characteristics (continued)

(Worst-Case Military Conditions, V_{CC} = 4.5V, T_J = 125°C)

			'–1' Speed		'Std' Speed		
Parameter	**Description**		**Min.**	**Max.**	**Min.**	**Max.**	**Units**
Global Clock Network							
t_{CKH}	Input Low to High	FO = 16 FO = 128		7.8 8.9		9.2 10.5	ns
t_{CKL}	Input High to Low	FO = 16 FO = 128		10.3 11.2		12.1 13.2	ns
t_{PWH}	Minimum Pulse Width High	FO = 16 FO = 128	10.4 10.9		12.2 12.9		ns
t_{PWL}	Minimum Pulse Width Low	FO = 16 FO = 128	10.4 10.9		12.2 12.9		ns
t_{CKSW}	Maximum Skew	FO = 16 FO = 128		1.9 2.9		2.2 3.4	ns
t_P	Minimum Period	FO = 16 FO = 128	21.7 23.2		25.6 27.3		ns
f_{MAX}	Maximum Frequency	FO = 16 FO = 128		46 44		40 37	MHz
TTL Output Module Timing[1]							
t_{DLH}	Data to Pad High			12.1		14.2	ns
t_{DHL}	Data to Pad Low			13.8		16.3	ns
t_{ENZH}	Enable Pad Z to High			12.0		14.1	ns
t_{ENZL}	Enable Pad Z to Low			14.6		17.1	ns
t_{ENHZ}	Enable Pad High to Z			16.0		18.8	ns
t_{ENLZ}	Enable Pad Low to Z			14.5		17.0	ns
d_{TLH}	Delta Low to High			0.09		0.11	ns/pF
d_{THL}	Delta High to Low			0.12		0.15	ns/pF
CMOS Output Module Timing[1]							
t_{DLH}	Data to Pad High			15.1		17.7	ns
t_{DHL}	Data to Pad Low			11.5		13.6	ns
t_{ENZH}	Enable Pad Z to High			12.0		14.1	ns
t_{ENZL}	Enable Pad Z to Low			14.6		17.1	ns
t_{ENHZ}	Enable Pad High to Z			16.0		18.8	ns
t_{ENLZ}	Enable Pad Low to Z			14.5		17.0	ns
d_{TLH}	Delta Low to High			0.16		0.18	ns/pF
d_{THL}	Delta High to Low			0.09		0.11	ns/pF

Notes:

1. *Delays based on 50 pF loading.*
2. *SSO information can be found in the* Simultaneously Switching Output Limits for Actel FPGAs *application note at http://www.actel.com/appnotes.*

A1240A Timing Characteristics

(Worst-Case Military Conditions, V_{CC} = 4.5V, T_J = 125°C)

		'–1' Speed		'Std' Speed		
Parameter	**Description**	**Min.**	**Max.**	**Min.**	**Max.**	**Units**
Logic Module Propagation Delays[1]						
t_{PD1}	Single Module		5.2		6.1	ns
t_{CO}	Sequential Clk to Q		5.2		6.1	ns
t_{GO}	Latch G to Q		5.2		6.1	ns
t_{RS}	Flip-Flop (Latch) Reset to Q		5.2		6.1	ns
Logic Module Predicted Routing Delays[2]						
t_{RD1}	FO=1 Routing Delay		1.9		2.2	ns
t_{RD2}	FO=2 Routing Delay		2.4		2.8	ns
t_{RD3}	FO=3 Routing Delay		3.1		3.7	ns
t_{RD4}	FO=4 Routing Delay		4.3		5.0	ns
t_{RD8}	FO=8 Routing Delay		6.6		7.7	ns
Logic Module Sequential Timing[3, 4]						
t_{SUD}	Flip-Flop (Latch) Data Input Setup	0.5		0.5		ns
t_{HD}	Flip-Flop (Latch) Data Input Hold	0.0		0.0		ns
t_{SUENA}	Flip-Flop (Latch) Enable Setup	1.3		1.3		ns
t_{HENA}	Flip-Flop (Latch) Enable Hold	0.0		0.0		ns
t_{WCLKA}	Flip-Flop (Latch) Clock Active Pulse Width	7.4		8.1		ns
t_{WASYN}	Flip-Flop (Latch) Asynchronous Pulse Width	7.4		8.1		ns
t_A	Flip-Flop Clock Input Period	14.8		18.6		ns
t_{INH}	Input Buffer Latch Hold	2.5		2.5		ns
t_{INSU}	Input Buffer Latch Setup	–3.5		–3.5		ns
t_{OUTH}	Output Buffer Latch Hold	0.0		0.0		ns
t_{OUTSU}	Output Buffer Latch Setup	0.5		0.5		ns
f_{MAX}	Flip-Flop (Latch) Clock Frequency		63		54	MHz

Notes:

1. *For dual-module macros, use $t_{PD1} + t_{RD1} + t_{PDn}$, $t_{CO} + t_{RD1} + t_{PDn}$, or $t_{PD1} + t_{RD1} + t_{SUD}$, whichever is appropriate.*
2. *Routing delays are for typical designs across worst-case operating conditions. These parameters should be used for estimating device performance. Post-route timing analysis or simulation is required to determine actual worst-case performance. Post-route timing is based on actual routing delay measurements performed on the device prior to shipment.*
3. *Data applies to macros based on the S-module. Timing parameters for sequential macros constructed from C-modules can be obtained from the DirectTime Analyzer utility.*
4. *Setup and hold timing parameters for the Input Buffer Latch are defined with respect to the PAD and the D input. External setup/hold timing parameters must account for delay from an external PAD signal to the G inputs. Delay from an external PAD signal to the G input subtracts (adds) to the internal setup (hold) time.*

A1240A Timing Characteristics (continued)

(Worst-Case Military Conditions, V_{CC} = 4.5V, T_J = 125°C)

			'–1' Speed		'Std' Speed		
Parameter	**Description**		**Min.**	**Max.**	**Min.**	**Max.**	**Units**
Input Module Propagation Delays							
t_{INYH}	Pad to Y High			4.0		4.7	ns
t_{INYL}	Pad to Y Low			3.6		4.3	ns
t_{INGH}	G to Y High			6.9		8.1	ns
t_{INGL}	G to Y Low			6.6		7.7	ns
Input Module Predicted Routing Delays[1]							
t_{IRD1}	FO=1 Routing Delay			5.8		6.9	ns
t_{IRD2}	FO=2 Routing Delay			6.7		7.8	ns
t_{IRD3}	FO=3 Routing Delay			7.5		8.8	ns
t_{IRD4}	FO=4 Routing Delay			8.2		9.7	ns
t_{IRD8}	FO=8 Routing Delay			10.9		12.9	ns
Global Clock Network							
t_{CKH}	Input Low to High	FO = 32 FO = 256		13.3 16.3		15.7 19.2	ns
t_{CKL}	Input High to Low	FO = 32 FO = 256		13.3 16.5		15.7 19.5	ns
t_{PWH}	Minimum Pulse Width High	FO = 32 FO = 256	5.7 6.0		6.7 7.1		ns
t_{PWL}	Minimum Pulse Width Low	FO = 32 FO = 256	5.7 6.0		6.7 7.1		ns
t_{CKSW}	Maximum Skew	FO = 32 FO = 256		0.6 3.1		0.6 3.1	ns
t_{SUEXT}	Input Latch External Setup	FO = 32 FO = 256	0.0 0.0		0.0 0.0		ns
t_{HEXT}	Input Latch External Hold	FO = 32 FO = 256	8.6 13.8		8.6 13.8		ns
t_P	Minimum Period	FO = 32 FO = 256	11.5 12.2		13.5 14.3		ns
f_{MAX}	Maximum Frequency	FO = 32 FO = 256		87 82		74 70	MHz

Note:

1. *Routing delays are for typical designs across worst-case operating conditions. These parameters should be used for estimating device performance. Post-route timing analysis or simulation is required to determine actual worst-case performance. Post-route timing is based on actual routing delay measurements performed on the device prior to shipment. Optimization techniques may further reduce delays by 0 to 4 ns.*

A1240A Timing Characteristics (continued)

(Worst-Case Military Conditions, V_{CC} = 4.5V, T_J = 125°C)

		'–1' Speed		'Std' Speed		
Parameter	**Description**	**Min.**	**Max.**	**Min.**	**Max.**	**Units**
TTL Output Module Timing[1]						
t_{DLH}	Data to Pad High		11.0		13.0	ns
t_{DHL}	Data to Pad Low		13.9		16.4	ns
t_{ENZH}	Enable Pad Z to High		12.3		14.4	ns
t_{ENZL}	Enable Pad Z to Low		16.1		19.0	ns
t_{ENHZ}	Enable Pad High to Z		9.8		11.5	ns
t_{ENLZ}	Enable Pad Low to Z		11.5		13.6	ns
t_{GLH}	G to Pad High		12.4		14.6	ns
t_{GHL}	G to Pad Low		15.5		18.2	ns
d_{TLH}	Delta Low to High		0.09		0.11	ns/pF
d_{THL}	Delta High to Low		0.17		0.20	ns/pF
CMOS Output Module Timing[1]						
t_{DLH}	Data to Pad High		14.0		16.5	ns
t_{DHL}	Data to Pad Low		11.7		13.7	ns
t_{ENZH}	Enable Pad Z to High		12.3		14.4	ns
t_{ENZL}	Enable Pad Z to Low		16.1		19.0	ns
t_{ENHZ}	Enable Pad High to Z		9.8		11.5	ns
t_{ENLZ}	Enable Pad Low to Z		11.5		13.6	ns
t_{GLH}	G to Pad High		12.4		14.6	ns
t_{GHL}	G to Pad Low		15.5		18.2	ns
d_{TLH}	Delta Low to High		0.17		0.20	ns/pF
d_{THL}	Delta High to Low		0.12		0.15	ns/pF

Notes:

1. *Delays based on 50 pF loading.*
2. *SSO information can be found in the* Simultaneously Switching Output Limits for Actel FPGAs *application note at http://www.actel.com/appnotes.*

A1280A Timing Characteristics

(Worst-Case Military Conditions, V_{CC} = 4.5V, T_J = 125°C)

		'–1' Speed		'Std' Speed		
Parameter	**Description**	**Min.**	**Max.**	**Min.**	**Max.**	**Units**
Logic Module Propagation Delays[1]						
t_{PD1}	Single Module		5.2		6.1	ns
t_{CO}	Sequential Clk to Q		5.2		6.1	ns
t_{GO}	Latch G to Q		5.2		6.1	ns
t_{RS}	Flip-Flop (Latch) Reset to Q		5.2		6.1	ns
Logic Module Predicted Routing Delays[2]						
t_{RD1}	FO=1 Routing Delay		2.4		2.8	ns
t_{RD2}	FO=2 Routing Delay		3.4		4.0	ns
t_{RD3}	FO=3 Routing Delay		4.2		4.9	ns
t_{RD4}	FO=4 Routing Delay		5.1		6.0	ns
t_{RD8}	FO=8 Routing Delay		9.2		10.8	ns
Logic Module Sequential Timing[3, 4]						
t_{SUD}	Flip-Flop (Latch) Data Input Setup	0.5		0.5		ns
t_{HD}	Flip-Flop (Latch) Data Input Hold	0.0		0.0		ns
t_{SUENA}	Flip-Flop (Latch) Enable Setup	1.3		1.3		ns
t_{HENA}	Flip-Flop (Latch) Enable Hold	0.0		0.0		ns
t_{WCLKA}	Flip-Flop (Latch) Clock Active Pulse Width	7.4		8.6		ns
t_{WASYN}	Flip-Flop (Latch) Asynchronous Pulse Width	7.4		8.6		ns
t_A	Flip-Flop Clock Input Period	16.4		22.1		ns
t_{INH}	Input Buffer Latch Hold	2.5		2.5		ns
t_{INSU}	Input Buffer Latch Setup	–3.5		–3.5		ns
t_{OUTH}	Output Buffer Latch Hold	0.0		0.0		ns
t_{OUTSU}	Output Buffer Latch Setup	0.5		0.5		ns
f_{MAX}	Flip-Flop (Latch) Clock Frequency		60		41	MHz

Notes:

1. *For dual-module macros, use $t_{PD1} + t_{RD1} + t_{PDn}$, $t_{CO} + t_{RD1} + t_{PDn}$, or $t_{PD1} + t_{RD1} + t_{SUD}$, whichever is appropriate.*
2. *Routing delays are for typical designs across worst-case operating conditions. These parameters should be used for estimating device performance. Post-route timing analysis or simulation is required to determine actual worst-case performance. Post-route timing is based on actual routing delay measurements performed on the device prior to shipment.*
3. *Data applies to macros based on the S-module. Timing parameters for sequential macros constructed from C-modules can be obtained from the DirectTime Analyzer utility.*
4. *Setup and hold timing parameters for the input buffer latch are defined with respect to the PAD and the D input. External setup/hold timing parameters must account for delay from an external PAD signal to the G inputs. Delay from an external PAD signal to the G input subtracts (adds) to the internal setup (hold) time.*

A1280A Timing Characteristics (continued)

(Worst-Case Military Conditions, V_{CC} = 4.5V, T_J = 125°C)

			'–1' Speed		'Std' Speed		
Parameter	**Description**		**Min.**	**Max.**	**Min.**	**Max.**	**Units**
Input Module Propagation Delays							
t_{INYH}	Pad to Y High			4.0		4.7	ns
t_{INYL}	Pad to Y Low			3.6		4.3	ns
t_{INGH}	G to Y High			6.9		8.1	ns
t_{INGL}	G to Y Low			6.6		7.7	ns
Input Module Predicted Routing Delays[1]							
t_{RD1}	FO=1 Routing Delay			6.2		7.3	ns
t_{RD2}	FO=2 Routing Delay			7.2		8.4	ns
t_{RD3}	FO=3 Routing Delay			7.7		9.1	ns
t_{RD4}	FO=4 Routing Delay			8.9		10.5	ns
t_{RD8}	FO=8 Routing Delay			12.9		15.2	ns
Global Clock Network							
t_{CKH}	Input Low to High	FO = 32 FO = 384		13.3 17.9		15.7 21.1	ns
t_{CKL}	Input High to Low	FO = 32 FO = 384		13.3 18.2		15.7 21.4	ns
t_{PWH}	Minimum Pulse Width High	FO = 32 FO = 384	6.9 7.9		8.1 9.3		ns
t_{PWL}	Minimum Pulse Width Low	FO = 32 FO = 384	6.9 7.9		8.1 9.3		ns
t_{CKSW}	Maximum Skew	FO = 32 FO = 384		0.6 3.1		0.6 3.1	ns
t_{SUEXT}	Input Latch External Setup	FO = 32 FO = 384	0.0 0.0		0.0 0.0		ns
t_{HEXT}	Input Latch External Hold	FO = 32 FO = 384	8.6 13.8		8.6 13.8		ns
t_P	Minimum Period	FO = 32 FO = 384	13.7 16.0		16.2 18.9		ns
f_{MAX}	Maximum Frequency	FO = 32 FO = 384		73 63		62 53	MHz

Note:

1. *Routing delays are for typical designs across worst-case operating conditions. These parameters should be used for estimating device performance. Post-route timing analysis or simulation is required to determine actual worst-case performance. Post-route timing is based on actual routing delay measurements performed on the device prior to shipment. Optimization techniques may further reduce delays by 0 to 4 ns.*

A1280A Timing Characteristics (continued)

(Worst-Case Military Conditions, V_{CC} = 4.5V, T_J = 125°C)

		'–1' Speed		'Std' Speed		
Parameter	**Description**	**Min.**	**Max.**	**Min.**	**Max.**	**Units**
TTL Output Module Timing[1]						
t_{DLH}	Data to Pad High		11.0		13.0	ns
t_{DHL}	Data to Pad Low		13.9		16.4	ns
t_{ENZH}	Enable Pad Z to High		12.3		14.4	ns
t_{ENZL}	Enable Pad Z to Low		16.1		19.0	ns
t_{ENHZ}	Enable Pad High to Z		9.8		11.5	ns
t_{ENLZ}	Enable Pad Low to Z		11.5		13.6	ns
t_{GLH}	G to Pad High		12.4		14.6	ns
t_{GHL}	G to Pad Low		15.5		18.2	ns
d_{TLH}	Delta Low to High		0.09		0.11	ns/pF
d_{THL}	Delta High to Low		0.17		0.20	ns/pF
CMOS Output Module Timing[1]						
t_{DLH}	Data to Pad High		14.0		16.5	ns
t_{DHL}	Data to Pad Low		11.7		13.7	ns
t_{ENZH}	Enable Pad Z to High		12.3		14.4	ns
t_{ENZL}	Enable Pad Z to Low		16.1		19.0	ns
t_{ENHZ}	Enable Pad High to Z		9.8		11.5	ns
t_{ENLZ}	Enable Pad Low to Z		11.5		13.6	ns
t_{GLH}	G to Pad High		12.4		14.6	ns
t_{GHL}	G to Pad Low		15.5		18.2	ns
d_{TLH}	Delta Low to High		0.17		0.20	ns/pF
d_{THL}	Delta High to Low		0.12		0.15	ns/pF

Notes:

1. *Delays based on 50 pF loading.*
2. *SSO information can be found in the* Simultaneously Switching Output Limits for Actel FPGAs *application note at http://www.actel.com/appnotes.*

A1280XL Timing Characteristics

(Worst-Case Military Conditions, V_{CC} = 4.5V, T_J = 125°C)

		'–1' Speed		'Std' Speed		
Parameter	**Description**	**Min.**	**Max.**	**Min.**	**Max.**	**Units**
Logic Module Propagation Delays[1]						
t_{PD1}	Single Module		3.7		4.3	ns
t_{CO}	Sequential Clk to Q		3.7		4.3	ns
t_{GO}	Latch G to Q		3.7		4.3	ns
t_{RS}	Flip-Flop (Latch) Reset to Q		3.7		4.3	ns
Logic Module Predicted Routing Delays[2]						
t_{RD1}	FO=1 Routing Delay		1.7		2.1	ns
t_{RD2}	FO=2 Routing Delay		2.5		3.0	ns
t_{RD3}	FO=3 Routing Delay		3.1		3.6	ns
t_{RD4}	FO=4 Routing Delay		3.7		4.3	ns
t_{RD8}	FO=8 Routing Delay		7.0		8.3	ns
Logic Module Sequential Timing[3, 4]						
t_{SUD}	Flip-Flop (Latch) Data Input Setup	0.4		0.5		ns
t_{HD}	Flip-Flop (Latch) Data Input Hold	0.0		0.0		ns
t_{SUENA}	Flip-Flop (Latch) Enable Setup	1.1		1.2		ns
t_{HENA}	Flip-Flop (Latch) Enable Hold	0.0		0.0		ns
t_{WCLKA}	Flip-Flop (Latch) Clock Active Pulse Width	5.3		6.1		ns
t_{WASYN}	Flip-Flop (Latch) Asynchronous Pulse Width	5.3		6.1		ns
t_A	Flip-Flop Clock Input Period	10.7		12.3		ns
t_{INH}	Input Buffer Latch Hold	0.0		0.0		ns
t_{INSU}	Input Buffer Latch Setup	0.4		0.4		ns
t_{OUTH}	Output Buffer Latch Hold	0.0		0.0		ns
t_{OUTSU}	Output Buffer Latch Setup	0.4		0.4		ns
f_{MAX}	Flip-Flop (Latch) Clock Frequency		90		75	MHz

Notes:

1. *For dual-module macros, use $t_{PD1} + t_{RD1} + t_{PDn}$, $t_{CO} + t_{RD1} + t_{PDn}$, or $t_{PD1} + t_{RD1} + t_{SUD}$, whichever is appropriate.*
2. *Routing delays are for typical designs across worst-case operating conditions. These parameters should be used for estimating device performance. Post-route timing analysis or simulation is required to determine actual worst-case performance. Post-route timing is based on actual routing delay measurements performed on the device prior to shipment.*
3. *Data applies to macros based on the S-module. Timing parameters for sequential macros constructed from C-modules can be obtained from the DirectTime Analyzer utility.*
4. *Setup and hold timing parameters for the input buffer latch are defined with respect to the PAD and the D input. External setup/hold timing parameters must account for delay from an external PAD signal to the G inputs. Delay from an external PAD signal to the G input subtracts (adds) to the internal setup (hold) time.*

A1280XL Timing Characteristics (continued)

(Worst-Case Military Conditions, V_{CC} = 4.5V, T_J = 125°C)

			'–1' Speed		'Std' Speed		
Parameter	**Description**		**Min.**	**Max.**	**Min.**	**Max.**	**Units**
Input Module Propagation Delays							
t_{INYH}	Pad to Y High			1.5		1.7	ns
t_{INYL}	Pad to Y Low			1.7		2.1	ns
t_{INGH}	G to Y High			2.8		3.3	ns
t_{INGL}	G to Y Low			3.7		4.3	ns
Input Module Predicted Routing Delays[1]							
t_{RD1}	FO=1 Routing Delay			4.6		5.3	ns
t_{RD2}	FO=2 Routing Delay			5.2		6.1	ns
t_{RD3}	FO=3 Routing Delay			5.5		6.5	ns
t_{RD4}	FO=4 Routing Delay			6.4		7.5	ns
t_{RD8}	FO=8 Routing Delay			9.2		10.8	ns
Global Clock Network							
t_{CKH}	Input Low to High	FO = 32 FO = 384		7.1 8.0		8.4 9.5	ns
t_{CKL}	Input High to Low	FO = 32 FO = 384		7.0 8.0		8.3 9.5	ns
t_{PWH}	Minimum Pulse Width High	FO = 32 FO = 384	4.3 4.8		5.3 5.7		ns
t_{PWL}	Minimum Pulse Width Low	FO = 32 FO = 384	4.3 4.8		5.3 5.7		ns
t_{CKSW}	Maximum Skew	FO = 32 FO = 384		1.1 1.1		1.2 1.2	ns
t_{SUEXT}	Input Latch External Setup	FO = 32 FO = 384	0.0 0.0		0.0 0.0		ns
t_{HEXT}	Input Latch External Hold	FO = 32 FO = 384	3.6 4.6		4.2 5.3		ns
t_P	Minimum Period	FO = 32 FO = 384	9.1 9.8		10.7 11.8		ns
f_{MAX}	Maximum Frequency	FO = 32 FO = 384		110 100		90 85	MHz

Note:

1. *Routing delays are for typical designs across worst-case operating conditions. These parameters should be used for estimating device performance. Post-route timing analysis or simulation is required to determine actual worst-case performance. Post-route timing is based on actual routing delay measurements performed on the device prior to shipment. Optimization techniques may further reduce delays by 0 to 4 ns.*

A1280XL Timing Characteristics (continued)

(Worst-Case Military Conditions, V_{CC} = 4.5V, T_J = 125°C)

		'–1' Speed		'Std' Speed		
Parameter	**Description**	**Min.**	**Max.**	**Min.**	**Max.**	**Units**
TTL Output Module Timing[1]						
t_{DLH}	Data to Pad High		5.3		6.2	ns
t_{DHL}	Data to Pad Low		5.7		6.6	ns
t_{ENZH}	Enable Pad Z to High		5.3		6.2	ns
t_{ENZL}	Enable Pad Z to Low		5.8		6.8	ns
t_{ENHZ}	Enable Pad High to Z		7.5		8.9	ns
t_{ENLZ}	Enable Pad Low to Z		7.5		8.9	ns
t_{GLH}	G to Pad High		5.9		6.9	ns
t_{GHL}	G to Pad Low		6.6		7.8	ns
d_{TLH}	Delta Low to High		0.05		0.06	ns/pF
d_{THL}	Delta High to Low		0.05		0.09	ns/pF
CMOS Output Module Timing[1]						
t_{DLH}	Data to Pad High		6.6		7.9	ns
t_{DHL}	Data to Pad Low		4.7		5.5	ns
t_{ENZH}	Enable Pad Z to High		5.3		6.2	ns
t_{ENZL}	Enable Pad Z to Low		5.8		6.8	ns
t_{ENHZ}	Enable Pad High to Z		7.5		8.9	ns
t_{ENLZ}	Enable Pad Low to Z		7.5		8.9	ns
t_{GLH}	G to Pad High		5.9		6.9	ns
t_{GHL}	G to Pad Low		6.6		7.8	ns
d_{TLH}	Delta Low to High		0.07		0.09	ns/pF
d_{THL}	Delta High to Low		0.06		0.09	ns/pF

Notes:

1. *Delays based on 50 pF loading.*
2. *SSO information can be found in the* Simultaneously Switching Output Limits for Actel FPGAs *application note at http://www.actel.com/appnotes.*

A1425A Timing Characteristics

(Worst-Case Military Conditions, V_{CC} = 4.5V, T_J = 125°C)

		'–1' Speed		'Std' Speed		
Parameter	**Description**	**Min.**	**Max.**	**Min.**	**Max.**	**Units**
Logic Module Propagation Delays[1]						
t_{PD}	Internal Array Module		3.0		3.5	ns
t_{CO}	Sequential Clock to Q		3.0		3.5	ns
t_{CLR}	Asynchronous Clear to Q		3.0		3.5	ns
Logic Module Predicted Routing Delays[2]						
t_{RD1}	FO=1 Routing Delay		1.3		1.5	ns
t_{RD2}	FO=2 Routing Delay		1.9		2.1	ns
t_{RD3}	FO=3 Routing Delay		2.1		2.5	ns
t_{RD4}	FO=4 Routing Delay		2.6		2.9	ns
t_{RD8}	FO=8 Routing Delay		4.2		4.9	ns
Logic Module Sequential Timing						
t_{SUD}	Flip-Flop (Latch) Data Input Setup	0.9		1.0		ns
t_{HD}	Flip-Flop (Latch) Data Input Hold	0.0		0.0		ns
t_{SUENA}	Flip-Flop (Latch) Enable Setup	0.9		1.0		ns
t_{HENA}	Flip-Flop (Latch) Enable Hold	0.0		0.0		ns
t_{WASYN}	Asynchronous Pulse Width	3.8		4.4		ns
t_{WCLKA}	Flip-Flop Clock Pulse Width	3.8		4.4		ns
t_A	Flip-Flop Clock Input Period	7.9		9.3		ns
f_{MAX}	Flip-Flop Clock Frequency		125		100	MHz
Input Module Propagation Delays						
t_{INY}	Input Data Pad to Y		4.2		4.9	ns
t_{ICKY}	Input Reg IOCLK Pad to Y		7.0		8.2	ns
t_{OCKY}	Output Reg IOCLK Pad to Y		7.0		8.2	ns
t_{ICLRY}	Input Asynchronous Clear to Y		7.0		8.2	ns
t_{OCLRY}	Output Asynchronous Clear to Y		7.0		8.2	ns
Input Module Predicted Routing Delays[1, 3]						
t_{IRD1}	FO=1 Routing Delay		1.3		1.5	ns
t_{IRD2}	FO=2 Routing Delay		1.9		2.1	ns
t_{IRD3}	FO=3 Routing Delay		2.1		2.5	ns
t_{IRD4}	FO=4 Routing Delay		2.6		2.9	ns
t_{IRD8}	FO=8 Routing Delay		4.2		4.9	ns

Notes:

1. *For dual-module macros, use $t_{PD} + t_{RD1} + t_{PDn}$, $t_{CO} + t_{RD1} + t_{PDn}$, or $t_{PD1} + t_{RD1} + t_{SUD}$, whichever is appropriate.*
2. *Routing delays are for typical designs across worst-case operating conditions. These parameters should be used for estimating device performance. Post-route timing analysis or simulation is required to determine actual worst-case performance. Post-route timing is based on actual routing delay measurements performed on the device prior to shipment.*
3. *Optimization techniques may further reduce delays by 0 to 4 ns.*

A1425A Timing Characteristics (continued)

(Worst-Case Military Conditions, V_{CC} = 4.5V, T_J = 125°C)

		'–1' Speed		'Std' Speed		
Parameter	**Description**	**Min.**	**Max.**	**Min.**	**Max.**	**Units**
I/O Module Sequential Timing						
t_{INH}	Input F-F Data Hold (w.r.t. IOCLK Pad)	0.0		0.0		ns
t_{INSU}	Input F-F Data Setup (w.r.t. IOCLK Pad)	2.1		2.4		ns
t_{IDEH}	Input Data Enable Hold (w.r.t. IOCLK Pad)	0.0		0.0		ns
t_{IDESU}	Input Data Enable Setup (w.r.t. IOCLK Pad)	8.7		10.0		ns
t_{OUTH}	Output F-F Data Hold (w.r.t. IOCLK Pad)	1.1		1.2		ns
t_{OUTSU}	Output F-F Data Setup (w.r.t. IOCLK Pad)	1.1		1.2		ns
t_{ODEH}	Output Data Enable Hold (w.r.t. IOCLK Pad)	0.5		0.6		ns
t_{ODESU}	Output Data Enable Setup (w.r.t. IOCLK Pad)	2.0		2.4		ns
TTL Output Module Timing[1]						
t_{DHS}	Data to Pad, High Slew		7.5		8.9	ns
t_{DLS}	Data to Pad, Low Slew		11.9		14.0	ns
t_{ENZHS}	Enable to Pad, Z to H/L, High Slew		6.0		7.0	ns
t_{ENZLS}	Enable to Pad, Z to H/L, Low Slew		10.9		12.8	ns
t_{ENHSZ}	Enable to Pad, H/L to Z, High Slew		9.9		11.6	ns
t_{ENLSZ}	Enable to Pad, H/L to Z, Low Slew		9.9		11.6	ns
t_{CKHS}	IOCLK Pad to Pad H/L, High Slew		10.5		11.6	ns
t_{CKLS}	IOCLK Pad to Pad H/L, Low Slew		15.7		17.4	ns
d_{TLHHS}	Delta Low to High, High Slew		0.04		0.04	ns/pF
d_{TLHLS}	Delta Low to High, Low Slew		0.07		0.08	ns/pF
d_{THLHS}	Delta High to Low, High Slew		0.05		0.06	ns/pF
d_{THLLS}	Delta High to Low, Low Slew		0.07		0.08	ns/pF

Note:

1. Delays based on 35 pF loading.

A1425A Timing Characteristics (continued)

(Worst-Case Military Conditions, V_{CC} = 4.5V, T_J = 125°C)

		'–1' Speed		'Std' Speed		
Parameter	**Description**	**Min.**	**Max.**	**Min.**	**Max.**	**Units**
CMOS Output Module Timing[1]						
t_{DHS}	Data to Pad, High Slew		9.2		10.8	ns
t_{DLS}	Data to Pad, Low Slew		17.3		20.3	ns
t_{ENZHS}	Enable to Pad, Z to H/L, High Slew		7.7		9.1	ns
t_{ENZLS}	Enable to Pad, Z to H/L, Low Slew		13.1		15.5	ns
t_{ENHSZ}	Enable to Pad, H/L to Z, High Slew		9.9		11.6	ns
t_{ENLSZ}	Enable to Pad, H/L to Z, Low Slew		10.5		11.6	ns
t_{CKHS}	IOCLK Pad to Pad H/L, High Slew		12.5		13.7	ns
t_{CKLS}	IOCLK Pad to Pad H/L, Low Slew		18.1		20.1	ns
d_{TLHHS}	Delta Low to High, High Slew		0.06		0.07	ns/pF
d_{TLHLS}	Delta Low to High, Low Slew		0.11		0.13	ns/pF
d_{THLHS}	Delta High to Low, High Slew		0.04		0.05	ns/pF
d_{THLLS}	Delta High to Low, Low Slew		0.05		0.06	ns/pF
Dedicated (Hard-Wired) I/O Clock Network						
t_{IOCKH}	Input Low to High (Pad to I/O Module Input)		3.0		3.5	ns
t_{IOPWH}	Minimum Pulse Width High	3.9		4.4		ns
t_{IOPWL}	Minimum Pulse Width Low	3.9		4.4		ns
t_{IOSAPW}	Minimum Asynchronous Pulse Width	3.9		4.4		ns
t_{IOCKSW}	Maximum Skew		0.5		0.5	ns
t_{IOP}	Minimum Period	7.9		9.3		ns
f_{IOMAX}	Maximum Frequency		125		100	MHz
Dedicated (Hard-Wired) Array Clock Network						
t_{HCKH}	Input Low to High (Pad to S-Module Input)		4.6		5.3	ns
t_{HCKL}	Input High to Low (Pad to S-Module Input)		4.6		5.3	ns
t_{HPWH}	Minimum Pulse Width High	3.9		4.4		ns
t_{HPWL}	Minimum Pulse Width Low	3.9		4.4		ns
t_{HCKSW}	Maximum Skew		0.4		0.4	ns
t_{HP}	Minimum Period	7.9		9.3		ns
f_{HMAX}	Maximum Frequency		125		100	MHz

Notes:

1. *Delays based on 35 pF loading.*
2. *SSO information can be found in the* Simultaneously Switching Output Limits for Actel FPGAs *application note at http://www.actel.com/appnotes.*

A1425A Timing Characteristics (continued)

(Worst-Case Military Conditions, V_{CC} = 4.5V, T_J = 125°C)

		'–1' Speed		'Std' Speed		
Parameter	**Description**	**Min.**	**Max.**	**Min.**	**Max.**	**Units**
Routed Array Clock Networks						
t_{RCKH}	Input Low to High (FO=64)		5.5		6.4	ns
t_{RCKL}	Input High to Low (FO=64)		6.0		7.0	ns
t_{RPWH}	Min. Pulse Width High (FO=64)	4.9		5.7		ns
t_{RPWL}	Min. Pulse Width Low (FO=64)	4.9		5.7		ns
t_{RCKSW}	Maximum Skew (FO=128)		1.1		1.2	ns
t_{RP}	Minimum Period (FO=64)	10.1		11.6		ns
f_{RMAX}	Maximum Frequency (FO=64)		100		85	MHz
Clock-to-Clock Skews						
$t_{IOHCKSW}$	I/O Clock to H-Clock Skew	0.0	3.0	0.0	3.0	ns
$t_{IORCKSW}$	I/O Clock to R-Clock Skew	0.0	3.0	0.0	3.0	ns
t_{HRCKSW}	H-Clock to R-Clock Skew					
	(FO = 64)	0.0	1.0	0.0	1.0	ns
	(FO = 50% max.)	0.0	3.0	0.0	3.0	ns

A1460A Timing Characteristics

(Worst-Case Military Conditions, V_{CC} = 4.5V, T_J = 125°C)

		'–1' Speed		'Std' Speed		
Parameter	**Description**	**Min.**	**Max.**	**Min.**	**Max.**	**Units**
Logic Module Propagation Delays[1]						
t_{PD}	Internal Array Module		3.0		3.5	ns
t_{CO}	Sequential Clock to Q		3.0		3.5	ns
t_{CLR}	Asynchronous Clear to Q		3.0		3.5	ns
Logic Module Predicted Routing Delays[2]						
t_{RD1}	FO=1 Routing Delay		1.3		1.5	ns
t_{RD2}	FO=2 Routing Delay		1.9		2.1	ns
t_{RD3}	FO=3 Routing Delay		2.1		2.5	ns
t_{RD4}	FO=4 Routing Delay		2.6		2.9	ns
t_{RD8}	FO=8 Routing Delay		4.2		4.9	ns
Logic Module Sequential Timing						
t_{SUD}	Flip-Flop (Latch) Data Input Setup	0.9		1.0		ns
t_{HD}	Flip-Flop (Latch) Data Input Hold	0.0		0.0		ns
t_{SUENA}	Flip-Flop (Latch) Enable Setup	0.9		1.0		ns
t_{HENA}	Flip-Flop (Latch) Enable Hold	0.0		0.0		ns
t_{WASYN}	Asynchronous Pulse Width	4.8		5.6		ns
t_{WCLKA}	Flip-Flop Clock Pulse Width	4.8		5.6		ns
t_A	Flip-Flop Clock Input Period	9.9		11.6		ns
f_{MAX}	Flip-Flop Clock Frequency		100		85	MHz
Input Module Propagation Delays						
t_{INY}	Input Data Pad to Y		4.2		4.9	ns
t_{ICKY}	Input Reg IOCLK Pad to Y		7.0		8.2	ns
t_{OCKY}	Output Reg IOCLK Pad to Y		7.0		8.2	ns
t_{ICLRY}	Input Asynchronous Clear to Y		7.0		8.2	ns
t_{OCLRY}	Output Asynchronous Clear to Y		7.0		8.2	ns
Input Module Predicted Routing Delays[2, 3]						
t_{IRD1}	FO=1 Routing Delay		1.3		1.5	ns
t_{IRD2}	FO=2 Routing Delay		1.9		2.1	ns
t_{IRD3}	FO=3 Routing Delay		2.1		2.5	ns
t_{IRD4}	FO=4 Routing Delay		2.6		2.9	ns
t_{IRD8}	FO=8 Routing Delay		4.2		4.9	ns

Notes:

1. *For dual-module macros, use $t_{PD} + t_{RD1} + t_{PDn}$, $t_{CO} + t_{RD1} + t_{PDn}$, or $t_{PD1} + t_{RD1} + t_{SUD}$, whichever is appropriate.*
2. *Routing delays are for typical designs across worst-case operating conditions. These parameters should be used for estimating device performance. Post-route timing analysis or simulation is required to determine actual worst-case performance. Post-route timing is based on actual routing delay measurements performed on the device prior to shipment.*
3. *Optimization techniques may further reduce delays by 0 to 4 ns.*

A1460A Timing Characteristics (continued)

(Worst-Case Military Conditions, V_{CC} = 4.5V, T_J = 125°C)

		'–1' Speed		'Std' Speed		
Parameter	**Description**	**Min.**	**Max.**	**Min.**	**Max.**	**Units**
I/O Module Sequential Timing						
t_{INH}	Input F-F Data Hold (w.r.t. IOCLK Pad)	0.0		0.0		ns
t_{INSU}	Input F-F Data Setup (w.r.t. IOCLK Pad)	2.1		2.4		ns
t_{IDEH}	Input Data Enable Hold (w.r.t. IOCLK Pad)	0.0		0.0		ns
t_{IDESU}	Input Data Enable Setup (w.r.t. IOCLK Pad)	8.7		10.0		ns
t_{OUTH}	Output F-F Data Hold (w.r.t. IOCLK Pad)	1.1		1.2		ns
t_{OUTSU}	Output F-F Data Setup (w.r.t. IOCLK Pad)	1.1		1.2		ns
t_{ODEH}	Output Data Enable Hold (w.r.t. IOCLK Pad)	0.5		0.6		ns
t_{ODESU}	Output Data Enable Setup (w.r.t. IOCLK Pad)	2.0		2.4		ns
TTL Output Module Timing[1]						
t_{DHS}	Data to Pad, High Slew		7.5		8.9	ns
t_{DLS}	Data to Pad, Low Slew		11.9		14.0	ns
t_{ENZHS}	Enable to Pad, Z to H/L, High Slew		6.0		7.0	ns
t_{ENZLS}	Enable to Pad, Z to H/L, Low Slew		10.9		12.8	ns
t_{ENHSZ}	Enable to Pad, H/L to Z, High Slew		11.5		13.5	ns
t_{ENLSZ}	Enable to Pad, H/L to Z, Low Slew		10.9		12.8	ns
t_{CKHS}	IOCLK Pad to Pad H/L, High Slew		11.6		13.4	ns
t_{CKLS}	IOCLK Pad to Pad H/L, Low Slew		17.8		19.8	ns
d_{TLHHS}	Delta Low to High, High Slew		0.04		0.04	ns/pF
d_{TLHLS}	Delta Low to High, Low Slew		0.07		0.08	ns/pF
d_{THLHS}	Delta High to Low, High Slew		0.05		0.06	ns/pF
d_{THLLS}	Delta High to Low, Low Slew		0.07		0.08	ns/pF

Note:

1. Delays based on 35 pF loading.

A1460A Timing Characteristics (continued)

(Worst-Case Military Conditions, V_{CC} = 4.5V, T_J = 125°C)

		'–1' Speed		'Std' Speed		
Parameter	**Description**	**Min.**	**Max.**	**Min.**	**Max.**	**Units**
CMOS Output Module Timing[1]						
t_{DHS}	Data to Pad, High Slew		9.2		10.8	ns
t_{DLS}	Data to Pad, Low Slew		17.3		20.3	ns
t_{ENZHS}	Enable to Pad, Z to H/L, High Slew		7.7		9.1	ns
t_{ENZLS}	Enable to Pad, Z to H/L, Low Slew		13.1		15.5	ns
t_{ENHSZ}	Enable to Pad, H/L to Z, High Slew		10.9		12.8	ns
t_{ENLSZ}	Enable to Pad, H/L to Z, Low Slew		10.9		12.8	ns
t_{CKHS}	IOCLK Pad to Pad H/L, High Slew		14.1		16.0	ns
t_{CKLS}	IOCLK Pad to Pad H/L, Low Slew		20.2		22.4	ns
d_{TLHHS}	Delta Low to High, High Slew		0.06		0.07	ns/pF
d_{TLHLS}	Delta Low to High, Low Slew		0.11		0.13	ns/pF
d_{THLHS}	Delta High to Low, High Slew		0.04		0.05	ns/pF
d_{THLLS}	Delta High to Low, Low Slew		0.05		0.06	ns/pF
Dedicated (Hard-Wired) I/O Clock Network						
t_{IOCKH}	Input Low to High (Pad to I/O Module Input)		3.5		4.1	ns
t_{IOPWH}	Minimum Pulse Width High	4.8		5.7		ns
t_{IOPWL}	Minimum Pulse Width Low	4.8		5.7		ns
t_{IOSAPW}	Minimum Asynchronous Pulse Width	3.9		4.4		ns
t_{IOCKSW}	Maximum Skew		0.9		1.0	ns
t_{IOP}	Minimum Period	9.9		11.6		ns
f_{IOMAX}	Maximum Frequency		100		85	MHz
Dedicated (Hard-Wired) Array Clock Network						
t_{HCKH}	Input Low to High (Pad to S-Module Input)		5.5		6.4	ns
t_{HCKL}	Input High to Low (Pad to S-Module Input)		5.5		6.4	ns
t_{HPWH}	Minimum Pulse Width High	4.8		5.7		ns
t_{HPWL}	Minimum Pulse Width Low	4.8		5.7		ns
t_{HCKSW}	Maximum Skew		0.9		1.0	ns
t_{HP}	Minimum Period	9.9		11.6		ns
f_{HMAX}	Maximum Frequency		100		85	MHz

Notes:

1. *Delays based on 35 pF loading.*
2. *SSO information can be found in the* Simultaneously Switching Output Limits for Actel FPGAs *application note at http://www.actel.com/appnotes.*

A1460A Timing Characteristics (continued)

(Worst-Case Military Conditions, V_{CC} = 4.5V, T_J = 125°C)

		'–1' Speed		'Std' Speed		
Parameter	**Description**	**Min.**	**Max.**	**Min.**	**Max.**	**Units**
Routed Array Clock Networks						
t_{RCKH}	Input Low to High (FO=256)		9.0		10.5	ns
t_{RCKL}	Input High to Low (FO=256)		9.0		10.5	ns
t_{RPWH}	Min. Pulse Width High (FO=256)	6.3		7.1		ns
t_{RPWL}	Min. Pulse Width Low (FO=256)	6.3		7.1		ns
t_{RCKSW}	Maximum Skew (FO=128)		1.9		2.1	ns
t_{RP}	Minimum Period (FO=256)	12.9		14.5		ns
f_{RMAX}	Maximum Frequency (FO=256)		75		65	MHz
Clock-to-Clock Skews						
$t_{IOHCKSW}$	I/O Clock to H-Clock Skew	0.0	3.0	0.0	3.0	ns
$t_{IORCKSW}$	I/O Clock to R-Clock Skew	0.0	5.0	0.0	5.0	ns
t_{HRCKSW}	H-Clock to R-Clock Skew					
	(FO = 64)	0.0	1.0	0.0	1.0	ns
	(FO = 50% max.)	0.0	3.0	0.0	3.0	ns

A14100A Timing Characteristics

(Worst-Case Military Conditions, V_{CC} = 4.5V, T_J = 125°C)

		'–1' Speed		'Std' Speed		
Parameter	**Description**	**Min.**	**Max.**	**Min.**	**Max.**	**Units**
Logic Module Propagation Delays[1]						
t_{PD}	Internal Array Module		3.0		3.5	ns
t_{CO}	Sequential Clock to Q		3.0		3.5	ns
t_{CLR}	Asynchronous Clear to Q		3.0		3.5	ns
Logic Module Predicted Routing Delays[2]						
t_{RD1}	FO=1 Routing Delay		1.3		1.5	ns
t_{RD2}	FO=2 Routing Delay		1.9		2.1	ns
t_{RD3}	FO=3 Routing Delay		2.1		2.5	ns
t_{RD4}	FO=4 Routing Delay		2.6		2.9	ns
t_{RD8}	FO=8 Routing Delay		4.2		4.9	ns
Logic Module Sequential Timing						
t_{SUD}	Flip-Flop (Latch) Data Input Setup	1.0		1.0		ns
t_{HD}	Flip-Flop (Latch) Data Input Hold	0.6		0.6		ns
t_{SUENA}	Flip-Flop (Latch) Enable Setup	1.0		1.0		ns
t_{HENA}	Flip-Flop (Latch) Enable Hold	0.6		0.6		ns
t_{WASYN}	Asynchronous Pulse Width	4.8		5.6		ns
t_{WCLKA}	Flip-Flop Clock Pulse Width	4.8		5.6		ns
t_A	Flip-Flop Clock Input Period	9.9		11.6		ns
f_{MAX}	Flip-Flop Clock Frequency		100		85	MHz
Input Module Propagation Delays						
t_{INY}	Input Data Pad to Y		4.2		4.9	ns
t_{ICKY}	Input Reg IOCLK Pad to Y		7.0		8.2	ns
t_{OCKY}	Output Reg IOCLK Pad to Y		7.0		8.2	ns
t_{ICLRY}	Input Asynchronous Clear to Y		7.0		8.2	ns
t_{OCLRY}	Output Asynchronous Clear to Y		7.0		8.2	ns
Input Module Predicted Routing Delays[2, 3]						
t_{IRD1}	FO=1 Routing Delay		1.3		1.5	ns
t_{IRD2}	FO=2 Routing Delay		1.9		2.1	ns
t_{IRD3}	FO=3 Routing Delay		2.1		2.5	ns
t_{IRD4}	FO=4 Routing Delay		2.6		2.9	ns
t_{IRD8}	FO=8 Routing Delay		4.2		4.9	ns

Notes:

1. *For dual-module macros, use $t_{PD} + t_{RD1} + t_{PDn}$, $t_{CO} + t_{RD1} + t_{PDn}$, or $t_{PD1} + t_{RD1} + t_{SUD}$, whichever is appropriate.*
2. *Routing delays are for typical designs across worst-case operating conditions. These parameters should be used for estimating device performance. Post-route timing analysis or simulation is required to determine actual worst-case performance. Post-route timing is based on actual routing delay measurements performed on the device prior to shipment.*
3. *Optimization techniques may further reduce delays by 0 to 4 ns.*

A14100A Timing Characteristics (continued)

(Worst-Case Military Conditions, V_{CC} = 4.5V, T_J = 125°C)

		'–1' Speed		'Std' Speed		
Parameter	**Description**	**Min.**	**Max.**	**Min.**	**Max.**	**Units**
I/O Module Sequential Timing						
t_{INH}	Input F-F Data Hold (w.r.t. IOCLK Pad)	0.0		0.0		ns
t_{INSU}	Input F-F Data Setup (w.r.t. IOCLK Pad)	2.1		2.4		ns
t_{IDEH}	Input Data Enable Hold (w.r.t. IOCLK Pad)	0.0		0.0		ns
t_{IDESU}	Input Data Enable Setup (w.r.t. IOCLK Pad)	8.7		10.0		ns
t_{OUTH}	Output F-F Data Hold (w.r.t. IOCLK Pad)	1.2		1.2		ns
t_{OUTSU}	Output F-F Data Setup (w.r.t. IOCLK Pad)	1.2		1.2		ns
t_{ODEH}	Output Data Enable Hold (w.r.t. IOCLK Pad)	0.6		0.6		ns
t_{ODESU}	Output Data Enable Setup (w.r.t. IOCLK Pad)	2.4		2.4		ns
TTL Output Module Timing[1]						
t_{DHS}	Data to Pad, High Slew		7.5		8.9	ns
t_{DLS}	Data to Pad, Low Slew		11.9		14.0	ns
t_{ENZHS}	Enable to Pad, Z to H/L, High Slew		6.0		7.0	ns
t_{ENZLS}	Enable to Pad, Z to H/L, Low Slew		10.9		12.8	ns
t_{ENHSZ}	Enable to Pad, H/L to Z, High Slew		11.9		14.0	ns
t_{ENLSZ}	Enable to Pad, H/L to Z, Low Slew		10.9		12.8	ns
t_{CKHS}	IOCLK Pad to Pad H/L, High Slew		12.2		14.0	ns
t_{CKLS}	IOCLK Pad to Pad H/L, Low Slew		17.8		17.8	ns
d_{TLHHS}	Delta Low to High, High Slew		0.04		0.04	ns/pF
d_{TLHLS}	Delta Low to High, Low Slew		0.07		0.08	ns/pF
d_{THLHS}	Delta High to Low, High Slew		0.05		0.06	ns/pF
d_{THLLS}	Delta High to Low, Low Slew		0.07		0.08	ns/pF

Note:

1. Delays based on 35 pF loading.

A14100A Timing Characteristics (continued)

(Worst-Case Military Conditions, V_{CC} = 4.5V, T_J = 125°C)

		'–1' Speed		'Std' Speed		
Parameter	**Description**	**Min.**	**Max.**	**Min.**	**Max.**	**Units**
CMOS Output Module Timing[1]						
t_{DHS}	Data to Pad, High Slew		9.2		10.8	ns
t_{DLS}	Data to Pad, Low Slew		17.3		20.3	ns
t_{ENZHS}	Enable to Pad, Z to H/L, High Slew		7.7		9.1	ns
t_{ENZLS}	Enable to Pad, Z to H/L, Low Slew		13.1		15.5	ns
t_{ENHSZ}	Enable to Pad, H/L to Z, High Slew		11.6		14.0	ns
t_{ENLSZ}	Enable to Pad, H/L to Z, Low Slew		10.9		12.8	ns
t_{CKHS}	IOCLK Pad to Pad H/L, High Slew		14.4		16.0	ns
t_{CKLS}	IOCLK Pad to Pad H/L, Low Slew		20.2		22.4	ns
d_{TLHHS}	Delta Low to High, High Slew		0.06		0.07	ns/pF
d_{TLHLS}	Delta Low to High, Low Slew		0.11		0.13	ns/pF
d_{THLHS}	Delta High to Low, High Slew		0.04		0.05	ns/pF
d_{THLLS}	Delta High to Low, Low Slew		0.05		0.06	ns/pF
Dedicated (Hard-Wired) I/O Clock Network						
t_{IOCKH}	Input Low to High (Pad to I/O Module Input)		3.5		4.1	ns
t_{IOPWH}	Minimum Pulse Width High	4.8		5.7		ns
t_{IOPWL}	Minimum Pulse Width Low	4.8		5.7		ns
t_{IOSAPW}	Minimum Asynchronous Pulse Width	3.9		4.4		ns
t_{IOCKSW}	Maximum Skew		0.9		1.0	ns
t_{IOP}	Minimum Period	9.9		11.6		ns
f_{IOMAX}	Maximum Frequency		100		85	MHz
Dedicated (Hard-Wired) Array Clock Network						
t_{HCKH}	Input Low to High (Pad to S-Module Input)		5.5		6.4	ns
t_{HCKL}	Input High to Low (Pad to S-Module Input)		5.5		6.4	ns
t_{HPWH}	Minimum Pulse Width High	4.8		5.7		ns
t_{HPWL}	Minimum Pulse Width Low	4.8		5.7		ns
t_{HCKSW}	Maximum Skew		0.9		1.0	ns
t_{HP}	Minimum Period	9.9		11.6		ns
f_{HMAX}	Maximum Frequency		100		85	MHz

Notes:

1. *Delays based on 35 pF loading.*
2. *SSO information can be found in the* Simultaneously Switching Output Limits for Actel FPGAs *application note at http://www.actel.com/appnotes.*

A14100A Timing Characteristics (continued)

(Worst-Case Military Conditions, V_{CC} = 4.5V, T_J = 125°C)

		'–1' Speed		'Std' Speed		
Parameter	**Description**	**Min.**	**Max.**	**Min.**	**Max.**	**Units**
Routed Array Clock Networks						
t_{RCKH}	Input Low to High (FO=256)		9.0		10.5	ns
t_{RCKL}	Input High to Low (FO=256)		9.0		10.5	ns
t_{RPWH}	Min. Pulse Width High (FO=256)	6.3		7.1		ns
t_{RPWL}	Min. Pulse Width Low (FO=256)	6.3		7.1		ns
t_{RCKSW}	Maximum Skew (FO=128)		1.9		2.1	ns
t_{RP}	Minimum Period (FO=256)	12.9		14.5		ns
f_{RMAX}	Maximum Frequency (FO=256)		75		65	MHz
Clock-to-Clock Skews						
$t_{IOHCKSW}$	I/O Clock to H-Clock Skew	0.0	3.5	0.0	3.5	ns
$t_{IORCKSW}$	I/O Clock to R-Clock Skew	0.0	5.0	0.0	5.0	ns
t_{HRCKSW}	H-Clock to R-Clock Skew					
	(FO = 64)	0.0	1.0	0.0	1.0	ns
	(FO = 50% max.)	0.0	3.0	0.0	3.0	

A32100DX Timing Characteristics

(Worst-Case Military Conditions, V_{CC} = 4.5V, T_J = 125°C)

		'–1' Speed		'Std' Speed		
Parameter	**Description**	**Min.**	**Max.**	**Min.**	**Max.**	**Units**
Logic Module Combinatorial Functions						
t_{PD}	Internal Array Module Delay		3.1		4.1	ns
t_{PDD}	Internal Decode Module Delay		3.3		4.3	ns
Logic Module Predicted Routing Delays[1]						
t_{RD1}	FO=1 Routing Delay		1.3		1.8	ns
t_{RD2}	FO=2 Routing Delay		1.9		2.6	ns
t_{RD3}	FO=3 Routing Delay		2.6		3.4	ns
t_{RD4}	FO=4 Routing Delay		3.3		4.3	ns
t_{RD5}	FO=8 Routing Delay		0.6		0.8	ns
t_{RDD}	Decode-to-Output Routing Delay		0.5		0.6	ns
Logic Module Sequential Timing						
t_{CO}	Flip-Flop Clock-to-Output		3.1		4.1	ns
t_{GO}	Latch Gate-to-Output		3.1		4.1	ns
t_{SU}	Flip-Flop (Latch) Setup Time	0.5		0.6		ns
t_H	Flip-Flop (Latch) Hold Time	0.0		0.0		ns
t_{RO}	Flip-Flop (Latch) Reset to Output		3.1		4.1	ns
t_{SUENA}	Flip-Flop (Latch) Enable Setup	0.9		1.2		ns
t_{HENA}	Flip-Flop (Latch) Enable Hold	0.0		0.0		ns
t_{WCLKA}	Flip-Flop (Latch) Clock Active Pulse Width	4.3		5.8		ns
t_{WASYN}	Flip-Flop (Latch) Asynchronous Pulse Width	5.6		7.5		ns

Note:

1. *Routing delays are for typical designs across worst-case operating conditions. These parameters should be used for estimating device performance. Post-route timing analysis or simulation is required to determine actual worst-case performance. Post-route timing is based on actual routing delay measurements performed on the device prior to shipment.*

A32100DX Timing Characteristics (continued)

(Worst-Case Military Conditions, V_{CC} = 4.5V, T_J = 125°C)

		'–1' Speed		'Std' Speed		
Parameter	**Description**	**Min.**	**Max.**	**Min.**	**Max.**	**Units**
Synchronous SRAM Operations						
t_{RC}	Read Cycle Time	8.8		11.8		ns
t_{WC}	Write Cycle Time	8.8		11.8		ns
t_{RCKHL}	Clock High/Low Time	4.4		5.9		ns
t_{RCO}	Data Valid After Clock High/Low		4.4		5.9	ns
t_{ADSU}	Address/Data Setup Time	2.1		2.8		ns
t_{ADH}	Address/Data Hold Time	0.0		0.0		ns
t_{RENSU}	Read Enable Setup	0.8		1.1		ns
t_{RENH}	Read Enable Hold	4.4		5.9		ns
t_{WENSU}	Write Enable Setup	3.5		4.7		ns
t_{WENH}	Write Enable Hold	0.0		0.0		ns
t_{BENS}	Block Enable Setup	3.6		4.8		ns
t_{BENH}	Block Enable Hold	0.0		0.0		ns
Asynchronous SRAM Operations						
t_{RPD}	Asynchronous Access Time		10.6		14.1	ns
t_{RDADV}	Read Address Valid	11.5		15.3		ns
t_{ADSU}	Address/Data Setup Time	2.1		2.8		ns
t_{ADH}	Address/Data Hold Time	0.0		0.0		ns
t_{RENSUA}	Read Enable Setup to Address Valid	0.8		1.1		ns
t_{RENHA}	Read Enable Hold	4.4		5.9		ns
t_{WENSU}	Write Enable Setup	3.5		4.7		ns
t_{WENH}	Write Enable Hold	0.0		0.0		ns
t_{DOH}	Data Out Hold Time		1.6		2.1	ns

A32100DX Timing Characteristics (continued)

(Worst-Case Military Conditions, V_{CC} = 4.5V, T_J = 125°C)

			'–1' Speed		'Std' Speed		
Parameter	**Description**		**Min.**	**Max.**	**Min.**	**Max.**	**Units**
Input Module Propagation Delays							
t_{INPY}	Input Data Pad to Y			1.9		2.6	ns
t_{INGO}	Input Latch Gate-to-Output			4.0		5.3	ns
t_{INH}	Input Latch Hold		0.0		0.0		ns
t_{INSU}	Input Latch Setup		0.7		0.9		ns
t_{ILA}	Latch Active Pulse Width		6.1		8.1		ns
Input Module Predicted Routing Delays[1]							
t_{IRD1}	FO=1 Routing Delay			2.2		2.9	ns
t_{IRD2}	FO=2 Routing Delay			2.8		3.8	ns
t_{IRD3}	FO=3 Routing Delay			3.5		4.7	ns
t_{IRD4}	FO=4 Routing Delay			3.5		4.7	ns
t_{IRD8}	FO=8 Routing Delay			5.6		7.5	ns
Global Clock Network							
t_{CKH}	Input Low to High	FO=32		6.5		8.7	ns
		FO=635		7.9		10.6	ns
t_{CKL}	Input High to Low	FO=32		6.6		8.8	ns
		FO=635		8.8		11.8	ns
t_{PWH}	Minimum Pulse Width High	FO=32	4.1		5.5		ns
		FO=635	4.6		6.1		ns
t_{PWL}	Minimum Pulse Width Low	FO=32	4.1		5.5		ns
		FO=635	4.6		6.1		ns
t_{CKSW}	Maximum Skew	FO=32		1.8		2.4	ns
		FO=635		1.8		2.4	ns
t_{SUEXT}	Input Latch External Setup	FO=32	0.0		0.0		ns
		FO=635	0.0		0.0		ns
t_{HEXT}	Input Latch External Hold	FO=32	3.0		4.0		ns
		FO=635	3.8		5.1		ns
t_P	Minimum Period (1/fmax)	FO=32	7.1		9.5		ns
		FO=635	7.9		10.5		ns
f_{HMAX}	Maximum Datapath Frequency	FO=32		140		105	MHz
		FO=635		126		95	MHz

Note:

1. *Routing delays are for typical designs across worst-case operating conditions. These parameters should be used for estimating device performance. Post-route timing analysis or simulation is required to determine actual worst-case performance. Post-route timing is based on actual routing delay measurements performed on the device prior to shipment. Optimization techniques may further reduce delays by 0 to 4 ns.*

A32100DX Timing Characteristics (continued)

(Worst-Case Military Conditions, V_{CC} = 4.5V, T_J = 125°C)

		'–1' Speed		'Std' Speed		
Parameter	**Description**	**Min.**	**Max.**	**Min.**	**Max.**	**Units**
TTL Output Module Timing[1]						
t_{DLH}	Data to Pad High		5.1		6.8	ns
t_{DHL}	Data to Pad Low		6.3		8.3	ns
t_{ENZH}	Enable Pad Z to High		6.6		8.8	ns
t_{ENZL}	Enable Pad Z to Low		7.1		9.4	ns
t_{ENHZ}	Enable Pad High to Z		11.5		15.3	ns
t_{ENLZ}	Enable Pad Low to Z		11.5		15.3	ns
t_{GLH}	G to Pad High		11.5		15.3	ns
t_{GHL}	G to Pad Low		12.4		16.6	ns
t_{LSU}	I/O Latch Output Setup	0.4		0.5		ns
t_{LH}	I/O Latch Output Hold	0.0		0.0		ns
t_{LCO}	I/O Latch Clock-Out (Pad-to-Pad) 32 I/O		11.5		15.4	ns
t_{ACO}	Array Latch Clock-Out (Pad-to-Pad) 32 I/O		16.3		21.7	ns
d_{TLH}	Capacitive Loading, Low to High		0.04		0.06	ns/pF
d_{THL}	Capacitive Loading, High to Low		0.06		0.08	ns/pF
t_{WDO}	Hard-Wired Wide Decode Output		0.05		0.07	ns
CMOS Output Module Timing[1]						
t_{DLH}	Data to Pad High		6.3		8.3	ns
t_{DHL}	Data to Pad Low		5.1		6.8	ns
t_{ENZH}	Enable Pad Z to High		6.6		8.8	ns
t_{ENZL}	Enable Pad Z to Low		7.1		9.4	ns
t_{ENHZ}	Enable Pad High to Z		11.5		15.3	ns
t_{ENLZ}	Enable Pad Low to Z		11.5		15.3	ns
t_{GLH}	G to Pad High		11.5		15.3	ns
t_{GHL}	G to Pad Low		12.4		16.6	ns
t_{LSU}	I/O Latch Setup	0.4		0.5		ns
t_{LH}	I/O Latch Hold	0.0		0.0		ns
t_{LCO}	I/O Latch Clock-Out (Pad-to-Pad) 32 I/O		13.7		18.2	ns
t_{ACO}	Array Latch Clock-Out (Pad-to-Pad) 32 I/O		19.2		25.6	ns
d_{TLH}	Capacitive Loading, Low to High		0.06		0.08	ns/pF
d_{THL}	Capacitive Loading, High to Low		0.05		0.07	ns/pF
t_{WDO}	Hard-Wired Wide Decode Output		0.05		0.07	ns

Notes:

1. *Delays based on 35 pF loading.*
2. *SSO information can be found in the* Simultaneously Switching Output Limits for Actel FPGAs *application note at http://www.actel.com/appnotes.*

A32200DX Timing Characteristics

(Worst-Case Military Conditions, V_{CC} = 4.5V, T_J = 125°C)

		'–1' Speed		'Std' Speed		
Parameter	**Description**	**Min.**	**Max.**	**Min.**	**Max.**	**Units**
Logic Module Combinatorial Functions						
t_{PD}	Internal Array Module Delay		2.8		3.8	ns
t_{PDD}	Internal Decode Module Delay		3.4		4.6	ns
Logic Module Predicted Routing Delays[1]						
t_{RD1}	FO=1 Routing Delay		1.6		2.1	ns
t_{RD2}	FO=2 Routing Delay		2.3		3.1	ns
t_{RD3}	FO=3 Routing Delay		2.9		3.9	ns
t_{RD4}	FO=4 Routing Delay		3.5		4.7	ns
t_{RD5}	FO=8 Routing Delay		6.2		8.2	ns
t_{RDD}	Decode-to-Output Routing Delay		0.8		1.1	ns
Logic Module Sequential Timing Characteristics						
t_{CO}	Flip-Flop Clock-to-Output		3.2		4.2	ns
t_{GO}	Latch Gate-to-Output		2.8		3.8	ns
t_{SU}	Flip-Flop (Latch) Setup Time	0.5		0.6		ns
t_H	Flip-Flop (Latch) Hold Time	0.0		0.0		ns
t_{RO}	Flip-Flop (Latch) Reset to Output		3.2		4.2	ns
t_{SUENA}	Flip-Flop (Latch) Enable Setup	0.9		1.2		ns
t_{HENA}	Flip-Flop (Latch) Enable Hold	0.0		0.0		ns
t_{WCLKA}	Flip-Flop (Latch) Clock Active Pulse Width	4.3		5.8		ns
t_{WASYN}	Flip-Flop (Latch) Asynchronous Pulse Width	5.7		7.6		ns

Note:

1. *Routing delays are for typical designs across worst-case operating conditions. These parameters should be used for estimating device performance. Post-route timing analysis or simulation is required to determine actual worst-case performance. Post-route timing is based on actual routing delay measurements performed on the device prior to shipment.*

A32200DX Timing Characteristics (continued)

(Worst-Case Military Conditions, V_{CC} = 4.5V, T_J = 125°C)

		'–1' Speed		'Std' Speed		
Parameter	**Description**	**Min.**	**Max.**	**Min.**	**Max.**	**Units**
Synchronous SRAM Operations						
t_{RC}	Read Cycle Time	8.8		11.8		ns
t_{WC}	Write Cycle Time	8.8		11.8		ns
t_{RCKHL}	Clock High/Low Time	4.4		5.9		ns
t_{RCO}	Data Valid After Clock High/Low		4.4		5.9	ns
t_{ADSU}	Address/Data Setup Time	2.1		2.8		ns
t_{ADH}	Address/Data Hold Time	0.0		0.0		ns
t_{RENSU}	Read Enable Setup	0.8		1.1		ns
t_{RENH}	Read Enable Hold	4.4		5.9		ns
t_{WENSU}	Write Enable Setup	3.5		4.7		ns
t_{WENH}	Write Enable Hold	0.0		0.0		ns
t_{BENS}	Block Enable Setup	3.6		4.8		ns
t_{BENH}	Block Enable Hold	0.0		0.0		ns
Asynchronous SRAM Operations						
t_{RPD}	Asynchronous Access Time		10.6		14.1	ns
t_{RDADV}	Read Address Valid	11.5		15.3		ns
t_{ADSU}	Address/Data Setup Time	2.1		2.8		ns
t_{ADH}	Address/Data Hold Time	0.0		0.0		ns
t_{RENSUA}	Read Enable Setup to Address Valid	0.8		1.1		ns
t_{RENHA}	Read Enable Hold	4.4		5.9		ns
t_{WENSU}	Write Enable Setup	3.5		4.7		ns
t_{WENH}	Write Enable Hold	0.0		0.0		ns
t_{DOH}	Data Out Hold Time		1.6		2.1	ns

A32200DX Timing Characteristics (continued)

(Worst-Case Military Conditions, V_{CC} = 4.5V, T_J = 125°C)

			'–1' Speed		'Std' Speed		
Parameter	**Description**		**Min.**	**Max.**	**Min.**	**Max.**	**Units**
Input Module Propagation Delays							
t_{INPY}	Input Data Pad to Y			1.9		2.6	ns
t_{INGO}	Input Latch Gate-to-Output			4.6		6.0	ns
t_{INH}	Input Latch Hold		0.0		0.0		ns
t_{INSU}	Input Latch Setup		0.7		0.9		ns
t_{ILA}	Latch Active Pulse Width		6.1		8.1		ns
Input Module Predicted Routing Delays[1]							
t_{IRD1}	FO=1 Routing Delay			2.6		3.5	ns
t_{IRD2}	FO=2 Routing Delay			3.4		4.6	ns
t_{IRD3}	FO=3 Routing Delay			4.6		6.1	ns
t_{IRD4}	FO=4 Routing Delay			5.4		7.2	ns
t_{IRD5}	FO=8 Routing Delay			7.0		9.3	ns
Global Clock Network							
t_{CKH}	Input Low to High	FO=32		7.3		9.8	ns
		FO=635		8.5		11.3	ns
t_{CKL}	Input High to Low	FO=32		7.2		9.6	ns
		FO=635		9.3		12.5	ns
t_{PWH}	Minimum Pulse Width High	FO=32	3.2		4.3		ns
		FO=635	3.9		5.2		ns
t_{PWL}	Minimum Pulse Width Low	FO=32	3.2		4.3		ns
		FO=635	3.9		5.2		ns
t_{CKSW}	Maximum Skew	FO=32		1.8		2.4	ns
		FO=635		1.8		2.4	ns
t_{SUEXT}	Input Latch External Setup	FO=32	0.0		0.0		ns
		FO=635	0.0		0.0		ns
t_{HEXT}	Input Latch External Hold	FO=32	3.0		4.0		ns
		FO=635	3.8		5.1		ns
t_P	Minimum Period (1/fmax)	FO=32	5.8		7.7		ns
		FO=635	6.8		9.1		ns
f_{HMAX}	Maximum Datapath Frequency	FO=32		172		130	MHz
		FO=635		147		110	MHz

Note:

1. *Routing delays are for typical designs across worst-case operating conditions. These parameters should be used for estimating device performance. Post-route timing analysis or simulation is required to determine actual worst-case performance. Post-route timing is based on actual routing delay measurements performed on the device prior to shipment. Optimization techniques may further reduce delays by 0 to 4 ns.*

A32200DX Timing Characteristics (continued)

(Worst-Case Military Conditions, V_{CC} = 4.5V, T_J = 125°C)

		'–1' Speed		'Std' Speed		
Parameter	**Description**	**Min.**	**Max.**	**Min.**	**Max.**	**Units**
TTL Output Module Timing[1]						
t_{DLH}	Data to Pad High		5.1		6.8	ns
t_{DHL}	Data to Pad Low		6.3		8.3	ns
t_{ENZH}	Enable Pad Z to High		6.6		8.8	ns
t_{ENZL}	Enable Pad Z to Low		7.1		9.5	ns
t_{ENHZ}	Enable Pad High to Z		11.5		15.3	ns
t_{ENLZ}	Enable Pad Low to Z		11.5		15.3	ns
t_{GLH}	G to Pad High		11.5		15.3	ns
t_{GHL}	G to Pad Low		12.3		16.5	ns
t_{LSU}	I/O Latch Output Setup	0.4		0.5		ns
t_{LH}	I/O Latch Output Hold	0.0		0.0		ns
t_{LCO}	I/O Latch Clock-Out (Pad-to-Pad) 32 I/O		11.5		15.4	ns
t_{ACO}	Array Latch Clock-Out (Pad-to-Pad) 32 I/O		16.3		21.7	ns
d_{TLH}	Capacitive Loading, Low to High		0.04		0.06	ns/pF
d_{THL}	Capacitive Loading, High to Low		0.06		0.08	ns/pF
t_{WDO}	Hard-Wired Wide Decode Output		0.05		0.07	ns
CMOS Output Module Timing[1]						
t_{DLH}	Data to Pad High		5.1		6.8	ns
t_{DHL}	Data to Pad Low		6.3		8.3	ns
t_{ENZH}	Enable Pad Z to High		6.6		8.8	ns
t_{ENZL}	Enable Pad Z to Low		7.1		9.5	ns
t_{ENHZ}	Enable Pad High to Z		11.5		15.3	ns
t_{ENLZ}	Enable Pad Low to Z		11.5		15.3	ns
t_{GLH}	G to Pad High		11.5		15.3	ns
t_{GHL}	G to Pad Low		12.3		16.5	ns
t_{LSU}	I/O Latch Setup	0.4		0.5		ns
t_{LH}	I/O Latch Hold	0.0		0.0		ns
t_{LCO}	I/O Latch Clock-Out (Pad-to-Pad) 32 I/O		13.7		18.2	ns
t_{ACO}	Array Latch Clock-Out (Pad-to-Pad) 32 I/O		19.2		25.6	ns
d_{TLH}	Capacitive Loading, Low to High		0.06		0.08	ns/pF
d_{THL}	Capacitive Loading, High to Low		0.05		0.07	ns/pF
t_{WDO}	Hard-Wired Wide Decode Output		0.05		0.07	ns

Notes:

1. *Delays based on 35 pF loading.*
2. *SSO information can be found in the* Simultaneously Switching Output Limits for Actel FPGAs *application note at http://www.actel.com/appnotes.*

Pin Description

CLK **Clock (Input)**

ACT 1 only. TTL Clock input for global clock distribution network. The Clock input is buffered prior to clocking the logic modules. This pin can also be used as an I/O.

CLKA **Clock A (Input)**

ACT 2, 1200XL, 3200DX, and ACT 3 only. TTL Clock input for global clock distribution networks. The Clock input is buffered prior to clocking the logic modules. This pin can also be used as an I/O.

CLKB **Clock B (Input)**

ACT 2, 1200XL, 3200DX, and ACT 3 only. TTL Clock input for global clock distribution networks. The Clock input is buffered prior to clocking the logic modules. This pin can also be used as an I/O.

DCLK **Diagnostic Clock (Input)**

TTL Clock input for diagnostic probe and device programming. DCLK is active when the MODE pin is HIGH. This pin functions as an I/O when the MODE pin is LOW.

GND **Ground**

LOW supply voltage.

HCLK **Dedicated (Hard-wired) Array Clock (Input)**

ACT 3 only. TTL Clock input for sequential modules. This input is directly wired to each S-module and offers clock speeds independent of the number of S-modules being driven. This pin can also be used as an I/O.

I/O **Input/Output (Input, Output)**

I/O pin functions as an input, output, tristate, or bi-directional buffer. Input and output levels are compatible with standard TTL and CMOS specifications. In the ACT 3 and 3200DX families, unused I/Os are automatically tri-stated. With this configuration, the input buffer internal to the I/O module is disabled. In the ACT 1, ACT 2 and 1200XL families, unused I/Os are automatically configured as bi-directional buffers where each buffer is configured as a LOW driver.

IOCLK **Dedicated (Hard-wired) I/O Clock (Input)**

ACT 3 only. TTL Clock input for I/O modules. This input is directly wired to each I/O module and offers clock speeds independent of the number of I/O modules being driven. This pin can also be used as an I/O.

IOPCL **Dedicated (Hard-wired) I/O Preset/Clear (Input)**

ACT 3 only. TTL input for I/O preset or clear. This global input is directly wired to the preset and clear inputs of all I/O registers. This pin functions as an I/O when no I/O preset or clear macros are used.

MODE **Mode (Input)**

The MODE pin controls the use of diagnostic pins (DCLK, PRA, PRB, SDI). When the MODE pin is HIGH, the special functions are active. When the MODE pin is LOW, the pins function as I/Os. To provide debugging capability, the MODE pin should be terminated to GND through a 10 kΩ resistor so that the MODE pin can be pulled high when required.

NC **No Connection**

This pin is not connected to circuitry within the device.

PRA, I/O **Probe A (Output)**

The Probe A pin is used to output data from any user-defined design node within the device. This independent diagnostic pin can be used in conjunction with the Probe B pin to allow real-time diagnostic output of any signal path within the device. The Probe A pin can be used as a user-defined I/O when debugging has been completed. The pin's probe capabilities can be permanently disabled to protect programmed design confidentiality. PRA is accessible when the MODE pin is HIGH. This pin functions as an I/O when the MODE pin is LOW.

PRB, I/O **Probe B (Output)**

The Probe B pin is used to output data from any user-defined design node within the device. This independent diagnostic pin can be used in conjunction with the Probe A pin to allow real-time diagnostic output of any signal path within the device. The Probe B pin can be used as a user-defined I/O when verification has been completed. The pin's probe capabilities can be permanently disabled to protect programmed design confidentiality. PRB is accessible when the MODE pin is HIGH. This pin functions as an I/O when the MODE pin is LOW.

SDI **Serial Data Input (Input)**

Serial data input for diagnostic probe and device programming. SDI is active when the MODE pin is HIGH. This pin functions as an I/O when the MODE pin is LOW.

V_{CC} **5.0V Supply Voltage**

HIGH supply voltage.

QCLKA/B,C,D **Quadrant Clock (Input/Output)**

3200DX only. These four pins are the quadrant clock inputs. When not used as a register control signal, these pins can function as general purpose I/O.

TCK **Test Clock**

Clock signal to shift the JTAG data into the device. This pin functions as an I/O when the JTAG fuse is not programmed. JTAG pins are only available in the 3200DX device.

TDI **Test Data In**

Serial data input for JTAG instructions and data. Data is shifted in on the rising edge of TCLK. This pin functions as an I/O when the JTAG fuse is not programmed. JTAG pins are only available in the 3200DX device.

TDO **Test Data Out**

Serial data output for JTAG instructions and test data. This pin functions as an I/O when the JTAG fuse is not programmed. JTAG pins are only available in the 3200DX device.

TMS **Test Mode Select**

Serial data input for JTAG test mode. Data is shifted in on the rising edge of TCLK. This pin functions as an I/O when the JTAG fuse is not programmed. JTAG pins are only available in the 3200DX device.

Package Pin Assignments

84-Pin CPGA (Top View)

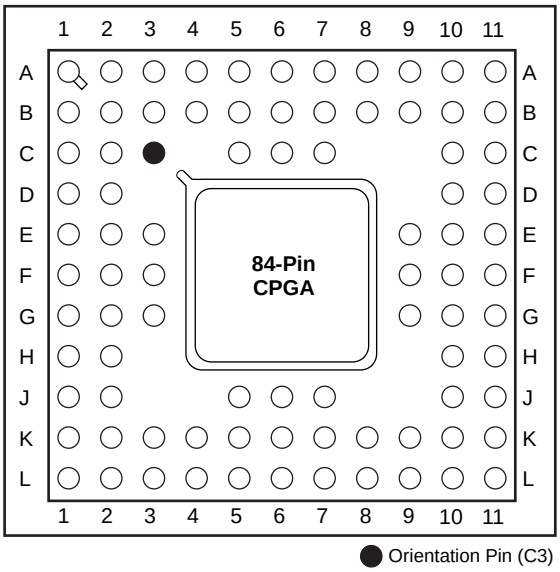

84-Pin CPGA

Pin Number	A1010B Function	A1020B Function
A1	I/O	I/O
A2	I/O	I/O
A3	I/O	I/O
A4	I/O	I/O
A5	I/O	I/O
A6	I/O	I/O
A7	I/O	I/O
A8	I/O	I/O
A9	I/O	I/O
A10	I/O	I/O
A11	PRA, I/O	PRA, I/O
B1	NC	I/O
B2	NC	NC
B3	I/O	I/O
B4	I/O	I/O
B5	V_{CC}	V_{CC}
B6	I/O	I/O
B7	GND	GND
B8	I/O	I/O
B9	I/O	I/O
B10	PRB, I/O	PRB, I/O
B11	SDI, I/O	SDI, I/O
C1	NC	I/O
C2	NC	I/O
C5	I/O	I/O
C6	I/O	I/O
C7	I/O	I/O
C10	DCLK, I/O	DCLK, I/O
C11	NC	I/O
D1	I/O	I/O
D2	I/O	I/O
D10	NC	I/O
D11	NC	I/O
E1	I/O	I/O
E2	GND	GND
E3	GND	GND
E9	V_{CC}	V_{CC}
E10	V_{CC}	V_{CC}
E11	MODE	MODE
F1	V_{CC}	V_{CC}
F2	I/O	I/O
F3	I/O	I/O

Pin Number	A1010B Function	A1020B Function
F9	CLK, I/O	CLK, I/O
F10	GND	GND
F11	I/O	I/O
G1	I/O	I/O
G2	V_{CC}	V_{CC}
G3	I/O	I/O
G9	I/O	I/O
G10	GND	GND
G11	I/O	I/O
H1	I/O	I/O
H2	I/O	I/O
H10	I/O	I/O
H11	I/O	I/O
J1	I/O	I/O
J2	NC	I/O
J5	I/O	I/O
J6	I/O	I/O
J7	I/O	I/O
J10	NC	I/O
J11	I/O	I/O
K1	NC	I/O
K2	V_{CC}	V_{CC}
K3	I/O	I/O
K4	I/O	I/O
K5	GND	GND
K6	I/O	I/O
K7	V_{CC}	V_{CC}
K8	I/O	I/O
K9	I/O	I/O
K10	NC	I/O
K11	NC	I/O
L1	NC	I/O
L2	I/O	I/O
L3	I/O	I/O
L4	I/O	I/O
L5	I/O	I/O
L6	I/O	I/O
L7	I/O	I/O
L8	I/O	I/O
L9	I/O	I/O
L10	I/O	I/O
L11	I/O	I/O

Package Pin Assignments (continued)

132-Pin CPGA (Top View)

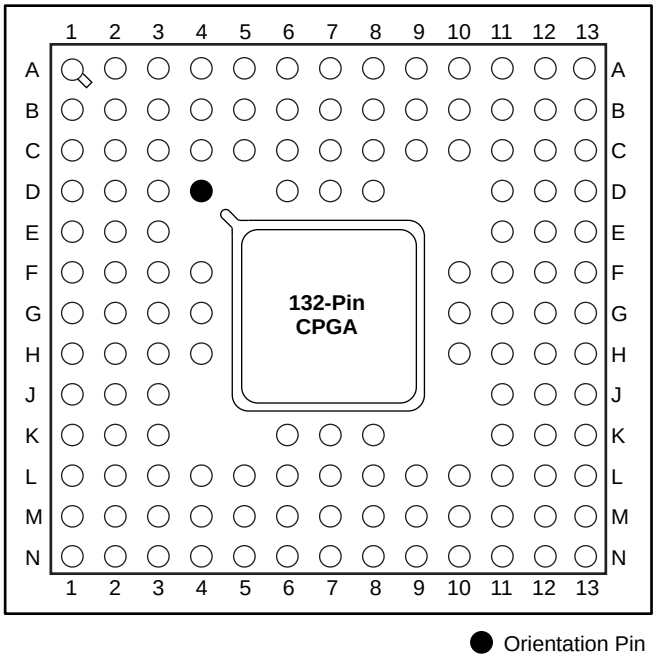

132-Pin CPGA

Pin Number	A1240A Function
A1	MODE
A2	I/O
A3	I/O
A4	I/O
A5	I/O
A6	I/O
A7	I/O
A8	I/O
A9	I/O
A10	I/O
A11	I/O
A12	I/O
A13	I/O
B1	I/O
B2	I/O
B3	I/O
B4	I/O
B5	GND
B6	CLKB, I/O
B7	CLKA, I/O
B8	PRA, I/O
B9	GND
B10	I/O
B11	I/O
B12	SDI, I/O
B13	I/O
C1	I/O
C2	I/O
C3	DCLK, I/O
C4	I/O
C5	GND
C6	PRB, I/O
C7	V_{CC}
C8	I/O
C9	GND
C10	I/O
C11	I/O
C12	I/O
C13	I/O
D1	I/O
D2	I/O
D3	I/O
D6	I/O
D7	V_{CC}

Pin Number	A1240A Function
D8	I/O
D11	I/O
D12	I/O
D13	I/O
E1	I/O
E2	I/O
E3	GND
E11	GND
E12	GND
E13	I/O
F1	I/O
F2	I/O
F3	I/O
F4	GND
F10	I/O
F11	I/O
F12	I/O
F13	I/O
G1	I/O
G2	V_{CC}
G3	V_{CC}
G4	V_{CC}
G10	V_{CC}
G11	V_{CC}
G12	V_{CC}
G13	V_{CC}
H1	I/O
H2	I/O
H3	I/O
H4	I/O
H10	I/O
H11	I/O
H12	I/O
H13	GND
J1	I/O
J2	GND
J3	GND
J11	GND
J12	I/O
J13	I/O
K1	I/O
K2	I/O
K3	I/O
K6	I/O

Pin Number	A1240A Function
K7	V_{CC}
K8	I/O
K11	I/O
K12	GND
K13	I/O
L1	I/O
L2	I/O
L3	I/O
L4	I/O
L5	GND
L6	I/O
L7	V_{CC}
L8	I/O
L9	GND
L10	I/O
L11	I/O
L12	I/O
L13	I/O
M1	I/O
M2	I/O
M3	I/O
M4	I/O
M5	I/O
M6	I/O
M7	I/O
M8	I/O
M9	GND
M10	I/O
M11	I/O
M12	I/O
M13	I/O
N1	I/O
N2	I/O
N3	I/O
N4	I/O
N5	I/O
N6	I/O
N7	I/O
N8	I/O
N9	I/O
N10	I/O
N11	I/O
N12	I/O
N13	I/O

Package Pin Assignments (continued)

133-Pin CPGA (Top View)

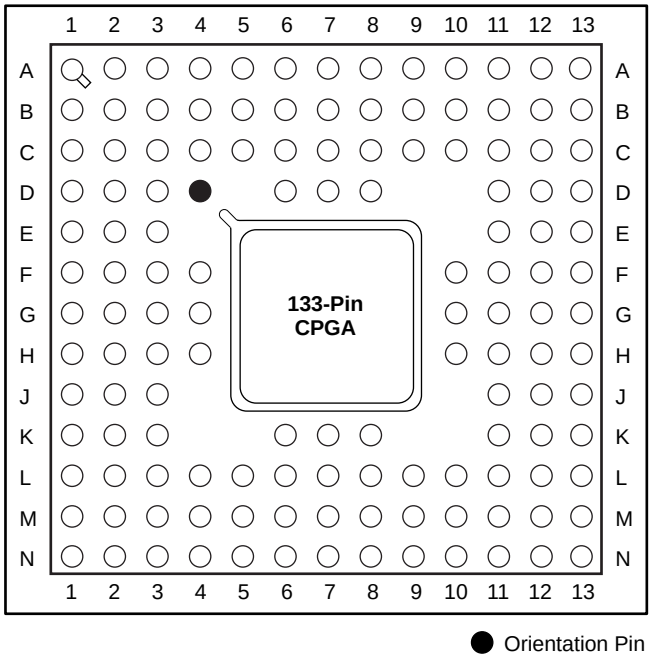

133-Pin CPGA

Pin Number	A1425A Function
A1	NC
A2	GND
A3	I/O
A4	I/O
A5	I/O
A6	PRA, I/O
A7	NC
A8	I/O
A9	I/O
A10	I/O
A11	I/O
A12	I/O
A13	NC
B1	I/O
B2	V_{CC}
B3	I/O
B4	I/O
B5	I/O
B6	CLKB, I/O
B7	V_{CC}
B8	I/O
B9	I/O
B10	I/O
B11	I/O
B12	V_{CC}
B13	I/O
C1	I/O
C2	SDI, I/O
C3	GND
C4	I/O
C5	I/O
C6	I/O
C7	GND
C8	I/O
C9	I/O
C10	IOCLK, I/O
C11	GND
C12	GND
C13	I/O
D1	I/O
D2	I/O
D3	I/O
D4	DCLK, I/O
D6	CLKA, I/O
D7	I/O

Pin Number	A1425A Function
D8	I/O
D11	I/O
D12	I/O
D13	I/O
E1	I/O
E2	I/O
E3	MODE
E11	V_{CC}
E12	I/O
E13	I/O
F1	I/O
F2	I/O
F3	I/O
F4	I/O
F10	GND
F11	I/O
F12	I/O
F13	I/O
G1	NC
G2	V_{CC}
G3	GND
G4	I/O
G10	I/O
G11	GND
G12	V_{CC}
G13	NC
H1	I/O
H2	I/O
H3	I/O
H4	I/O
H10	I/O
H11	I/O
H12	I/O
H13	I/O
J1	I/O
J2	V_{CC}
J3	I/O
J11	I/O
J12	V_{CC}
J13	I/O
K1	I/O
K2	I/O
K3	I/O
K6	I/O
K7	HCLKA, I/O

Pin Number	A1425A Function
K8	I/O
K11	I/O
K12	I/O
K13	I/O
L1	I/O
L2	I/O
L3	GND
L4	I/O
L5	I/O
L6	PRB, I/O
L7	GND
L8	I/O
L9	I/O
L10	IOPCL, I/O
L11	GND
L12	I/O
L13	I/O
M1	I/O
M2	V_{CC}
M3	GND
M4	I/O
M5	I/O
M6	I/O
M7	V_{CC}
M8	I/O
M9	I/O
M10	I/O
M11	I/O
M12	V_{CC}
M13	I/O
N1	NC
N2	I/O
N3	I/O
N4	I/O
N5	I/O
N6	I/O
N7	NC
N8	I/O
N9	I/O
N10	I/O
N11	I/O
N12	GND
N13	NC

Package Pin Assignments (continued)

176-Pin CPGA (Top View)

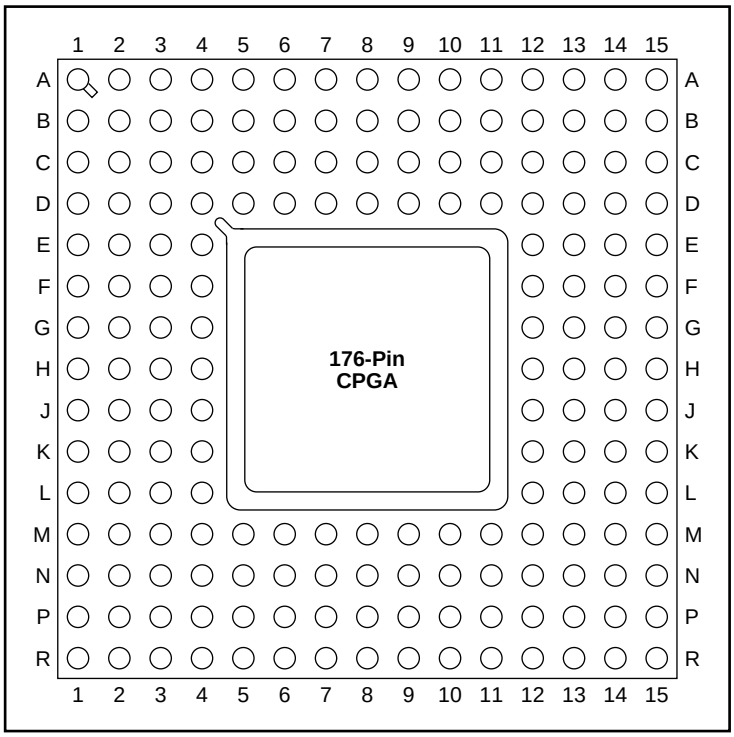

.

176-Pin CPGA

Pin Number	A1280A Function	A1280XL Function
A1	I/O	I/O
A2	I/O	I/O
A3	I/O	I/O
A4	I/O	I/O
A5	I/O	I/O
A6	I/O	I/O
A7	I/O	I/O
A8	I/O	I/O
A9	CLKA, I/O	CLKA, I/O
A10	I/O	I/O
A11	I/O	I/O
A12	I/O	I/O
A13	I/O	I/O
A14	I/O	I/O
A15	I/O	I/O
B1	I/O	I/O
B2	I/O	I/O
B3	DCLK, I/O	DCLK, I/O
B4	I/O	I/O
B5	I/O	I/O
B6	I/O	I/O
B7	I/O	I/O
B8	CLKB, I/O	CLKB, I/O
B9	I/O	I/O
B10	I/O	I/O
B11	I/O	I/O
B12	I/O	I/O
B13	I/O	I/O
B14	SDI, I/O	SDI, I/O
B15	I/O	I/O
C1	I/O	I/O
C2	I/O	I/O
C3	MODE	MODE
C4	I/O	I/O
C5	I/O	I/O
C6	I/O	I/O
C7	I/O	I/O
C8	GND	GND
C9	PRA, I/O	PRA, I/O
C10	I/O	I/O
C11	I/O	I/O
C12	I/O	I/O
C13	I/O	I/O
C14	I/O	I/O

Pin Number	A1280A Function	A1280XL Function
C15	I/O	I/O
D1	I/O	I/O
D2	I/O	I/O
D3	I/O	I/O
D4	GND	GND
D5	V_{CC}	V_{CC}
D6	GND	GND
D7	PRB, I/O	PRB, I/O
D8	V_{CC}	V_{CC}
D9	I/O	I/O
D10	GND	GND
D11	V_{CC}	V_{CC}
D12	GND	GND
D13	I/O	I/O
D14	I/O	I/O
D15	I/O	I/O
E1	I/O	I/O
E2	I/O	I/O
E3	I/O	I/O
E4	GND	GND
E12	GND	GND
E13	I/O	I/O
E14	I/O	I/O
E15	I/O	I/O
F1	I/O	I/O
F2	I/O	I/O
F3	I/O	I/O
F4	V_{CC}	V_{CC}
F12	GND	GND
F13	I/O	I/O
F14	I/O	I/O
F15	I/O	I/O
G1	I/O	I/O
G2	I/O	I/O
G3	I/O	I/O
G4	GND	GND
G12	V_{CC}	V_{CC}
G13	I/O	I/O
G14	I/O	I/O
G15	I/O	I/O
H1	I/O	I/O
H2	V_{CC}	V_{CC}
H3	V_{CC}	V_{CC}
H4	GND	GND

176-Pin CPGA (Continued)

Pin Number	A1280A Function	A1280XL Function
H12	GND	GND
H13	V_{CC}	V_{CC}
H14	V_{CC}	V_{CC}
H15	I/O	I/O
J1	I/O	I/O
J2	I/O	I/O
J3	I/O	I/O
J4	V_{CC}	V_{CC}
J12	GND	GND
J13	GND	GND
J14	V_{CC}	V_{CC}
J15	I/O	I/O
K1	I/O	I/O
K2	I/O	I/O
K3	I/O	I/O
K4	GND	GND
K12	GND	GND
K13	I/O	I/O
K14	I/O	I/O
K15	I/O	I/O
L1	I/O	I/O
L2	I/O	I/O
L3	I/O	I/O
L4	GND	GND
L12	I/O	I/O
L13	I/O	I/O
L14	I/O	I/O
L15	I/O	I/O
M1	I/O	I/O
M2	I/O	I/O
M3	I/O	I/O
M4	GND	GND
M5	V_{CC}	V_{CC}
M6	GND	GND
M7	I/O	I/O
M8	GND	GND
M9	I/O	I/O
M10	GND	GND
M11	V_{CC}	V_{CC}
M12	GND	GND
M13	I/O	I/O
M14	I/O	I/O
M15	I/O	I/O
N1	I/O	I/O

Pin Number	A1280A Function	A1280XL Function
N2	I/O	I/O
N3	I/O	I/O
N4	I/O	I/O
N5	I/O	I/O
N6	I/O	I/O
N7	I/O	I/O
N8	V_{CC}	V_{CC}
N9	I/O	I/O
N10	I/O	I/O
N11	I/O	I/O
N12	I/O	I/O
N13	I/O	I/O
N14	I/O	I/O
N15	I/O	I/O
P1	I/O	I/O
P2	I/O	I/O
P3	I/O	I/O
P4	I/O	I/O
P5	I/O	I/O
P6	I/O	I/O
P7	I/O	I/O
P8	I/O	I/O
P9	I/O	I/O
P10	I/O	I/O
P11	I/O	I/O
P12	I/O	I/O
P13	I/O	I/O
P14	I/O	I/O
P15	I/O	I/O
R1	I/O	I/O
R2	I/O	I/O
R3	I/O	I/O
R4	I/O	I/O
R5	I/O	I/O
R6	I/O	I/O
R7	I/O	I/O
R8	I/O	I/O
R9	I/O	I/O
R10	I/O	I/O
R11	I/O	I/O
R12	I/O	I/O
R13	I/O	I/O
R14	I/O	I/O
R15	I/O	I/O

Package Pin Assignments (continued)

207-Pin CPGA (Top View)

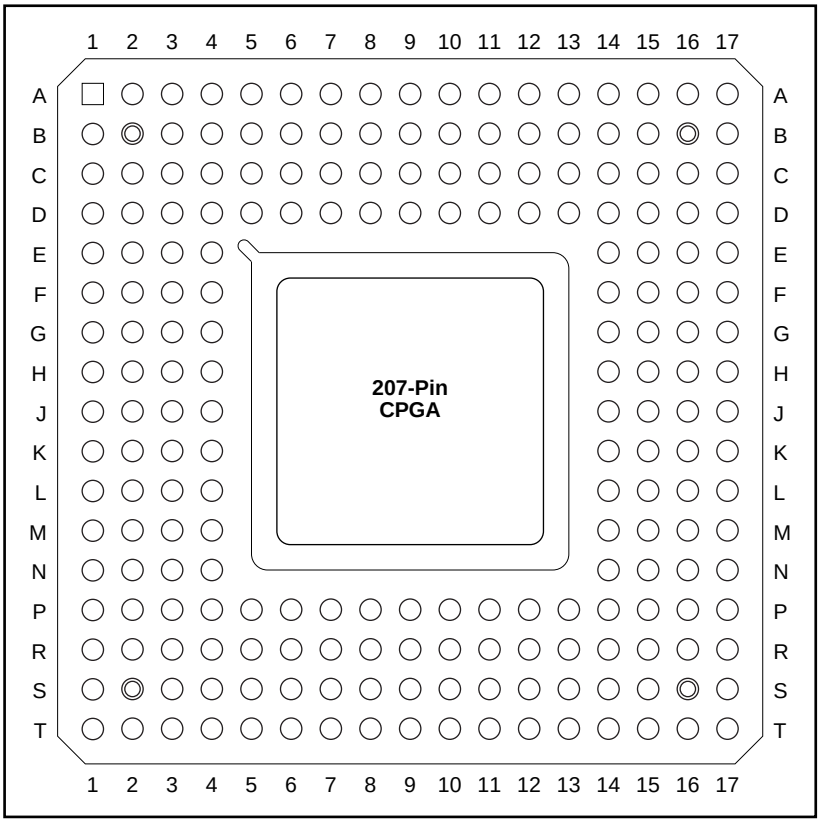

207-Pin CPGA

Pin Number	A1460A Function
A1	NC
A2	NC
A3	I/O
A4	I/O
A5	I/O
A6	I/O
A7	I/O
A8	I/O
A9	I/O
A10	I/O
A11	I/O
A12	I/O
A13	I/O
A14	I/O
A15	I/O
A16	NC
A17	NC
B1	NC
B2	V_{CC}
B3	I/O
B4	I/O
B5	I/O
B6	I/O
B7	I/O
B8	I/O
B9	V_{CC}
B10	I/O
B11	I/O
B12	I/O
B13	I/O
B14	I/O
B15	I/O
B16	V_{CC}
B17	NC
C1	NC
C2	NC
C3	SDI, I/O
C4	I/O
C5	I/O
C6	I/O
C7	I/O
C8	I/O
C9	I/O

Pin Number	A1460A Function
C10	I/O
C11	I/O
C12	I/O
C13	I/O
C14	I/O
C15	GND
C16	I/O
C17	I/O
D1	I/O
D2	I/O
D3	I/O
D4	GND
D5	GND
D6	I/O
D7	MODE
D8	I/O
D9	GND
D10	I/O
D11	V_{CC}
D12	I/O
D13	I/O
D14	GND
D15	I/O
D16	I/O
D17	I/O
E1	I/O
E2	I/O
E3	I/O
E4	DCLK, I/O
E14	I/O
E15	I/O
E16	I/O
E17	I/O
F1	I/O
F2	I/O
F3	I/O
F4	I/O
F14	I/O
F15	I/O
F16	I/O
F17	I/O
G1	I/O
G2	I/O

Pin Number	A1460A Function
G3	I/O
G4	I/O
G14	I/O
G15	I/O
G16	I/O
G17	I/O
H1	PRA, I/O
H2	I/O
H3	I/O
H4	I/O
H14	I/O
H15	I/O
H16	I/O
H17	I/O
J1	I/O
J2	V_{CC}
J3	CLKB, I/O
J4	GND
J14	GND
J15	HCLK, I/O
J16	V_{CC}
J17	I/O
K1	CLKA, I/O
K2	I/O
K3	I/O
K4	I/O
K14	I/O
K15	I/O
K16	PRB, I/O
K17	I/O
L1	I/O
L2	I/O
L3	I/O
L4	I/O
L14	I/O
L15	I/O
L16	I/O
L17	I/O
M1	I/O
M2	I/O
M3	I/O
M4	I/O
M14	I/O

207-Pin CPGA (Continued)

Pin Number	A1460A Function
M15	I/O
M16	I/O
M17	I/O
N1	I/O
N2	I/O
N3	I/O
N4	I/O
N14	IOPCL, I/O
N15	I/O
N16	I/O
N17	I/O
P1	I/O
P2	I/O
P3	GND
P4	GND
P5	IOCLK, I/O
P6	I/O
P7	GND
P8	I/O
P9	GND
P10	I/O
P11	I/O
P12	V_{CC}
P13	I/O
P14	GND
P15	I/O
P16	I/O

Pin Number	A1460A Function
P17	I/O
R1	I/O
R2	I/O
R3	I/O
R4	I/O
R5	I/O
R6	I/O
R7	I/O
R8	I/O
R9	I/O
R10	I/O
R11	I/O
R12	I/O
R13	I/O
R14	I/O
R15	GND
R16	I/O
R17	I/O
S1	NC
S2	V_{CC}
S3	NC
S4	I/O
S5	I/O
S6	I/O
S7	I/O
S8	I/O
S9	V_{CC}

Pin Number	A1460A Function
S10	I/O
S11	I/O
S12	I/O
S13	I/O
S14	I/O
S15	I/O
S16	V_{CC}
S17	NC
T1	NC
T2	NC
T3	I/O
T4	I/O
T5	V_{CC}
T6	I/O
T7	I/O
T8	I/O
T9	I/O
T10	I/O
T11	I/O
T12	I/O
T13	I/O
T14	I/O
T15	I/O
T16	NC
T17	NC

Package Pin Assignments (continued)

257-Pin CPGA (Top View)

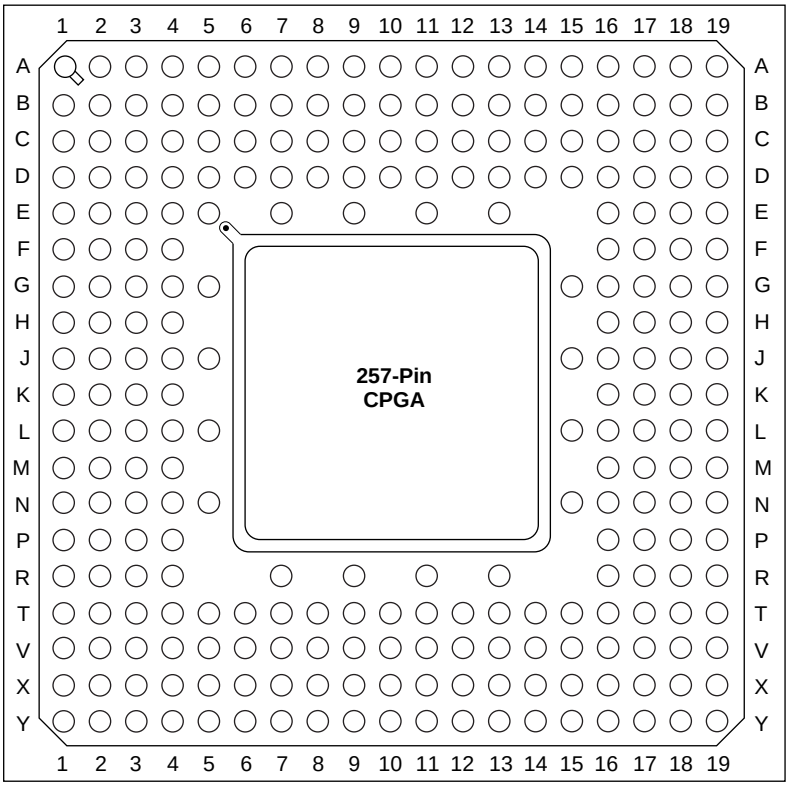

257-Pin CPGA

Pin Number	A14100A Function
A1	I/O
A2	I/O
A3	I/O
A4	I/O
A5	MODE
A6	I/O
A7	I/O
A8	I/O
A9	I/O
A10	I/O
A11	I/O
A12	I/O
A13	I/O
A14	I/O
A15	I/O
A16	I/O
A17	I/O
A18	I/O
A19	I/O
B1	I/O
B2	I/O
B3	I/O
B4	SDI, I/O
B5	I/O
B6	I/O
B7	I/O
B8	I/O
B9	I/O
B10	I/O
B11	I/O
B12	I/O
B13	I/O
B14	I/O
B15	I/O
B16	GND
B17	I/O
B18	I/O
B19	I/O
C1	I/O
C2	I/O
C3	V_{CC}
C4	GND
C5	I/O
C6	I/O

Pin Number	A14100A Function
C7	I/O
C8	I/O
C9	I/O
C10	V_{CC}
C11	I/O
C12	I/O
C13	V_{CC}
C14	I/O
C15	I/O
C16	I/O
C17	V_{CC}
C18	I/O
C19	I/O
D1	I/O
D2	I/O
D3	I/O
D4	GND
D5	I/O
D6	I/O
D7	I/O
D8	I/O
D9	I/O
D10	GND
D11	I/O
D12	I/O
D13	I/O
D14	I/O
D15	I/O
D16	GND
D17	I/O
D18	I/O
D19	I/O
E1	I/O
E2	I/O
E3	I/O
E4	DCLK, I/O
E5	NC
E7	I/O
E9	I/O
E11	GND
E13	I/O
E16	I/O
E17	I/O
E18	I/O

Pin Number	A14100A Function
E19	I/O
F1	I/O
F2	I/O
F3	I/O
F4	I/O
F16	I/O
F17	I/O
F18	I/O
F19	I/O
G1	I/O
G2	I/O
G3	I/O
G4	I/O
G5	I/O
G15	I/O
G16	I/O
G17	I/O
G18	I/O
G19	I/O
H1	I/O
H2	I/O
H3	I/O
H4	I/O
H16	I/O
H17	I/O
H18	I/O
H19	I/O
J1	PRA, I/O
J2	I/O
J3	I/O
J4	I/O
J5	GND
J15	I/O
J16	HCLK, I/O
J17	PRB, I/O
J18	I/O
J19	I/O
K1	I/O
K2	I/O
K3	V_{CC}
K4	GND
K16	GND
K17	V_{CC}
K18	I/O

257-Pin CPGA (Continued)

Pin Number	A14100A Function
K19	I/O
L1	I/O
L2	I/O
L3	I/O
L4	CLKA, I/O
L5	CLKB, I/O
L15	GND
L16	I/O
L17	I/O
L18	I/O
L19	I/O
M1	I/O
M2	I/O
M3	I/O
M4	I/O
M16	I/O
M17	I/O
M18	I/O
M19	I/O
N1	I/O
N2	I/O
N3	I/O
N4	I/O
N5	I/O
N15	I/O
N16	I/O
N17	I/O
N18	I/O
N19	I/O
P1	I/O
P2	I/O
P3	I/O
P4	I/O
P16	I/O
P17	I/O
P18	I/O
P19	I/O
R1	I/O
R2	I/O
R3	I/O
R4	GND
R7	I/O

Pin Number	A14100A Function
R9	I/O
R11	I/O
R13	I/O
R16	IOPCL, I/O
R17	I/O
R18	I/O
R19	I/O
T1	I/O
T2	I/O
T3	I/O
T4	GND
T5	IOCLK, I/O
T6	I/O
T7	I/O
T8	I/O
T9	I/O
T10	GND
T11	I/O
T12	I/O
T13	I/O
T14	I/O
T15	I/O
T16	GND
T17	GND
T18	I/O
T19	I/O
V1	I/O
V2	I/O
V3	V_{CC}
V4	I/O
V5	I/O
V6	I/O
V7	V_{CC}
V8	I/O
V9	I/O
V10	V_{CC}
V11	I/O
V12	I/O
V13	I/O
V14	I/O
V15	I/O
V16	I/O

Pin Number	A14100A Function
V17	V_{CC}
V18	I/O
V19	I/O
X1	I/O
X2	I/O
X3	I/O
X4	I/O
X5	I/O
X6	I/O
X7	GND
X8	I/O
X9	I/O
X10	I/O
X11	I/O
X12	I/O
X13	I/O
X14	V_{CC}
X15	I/O
X16	I/O
X17	I/O
X18	I/O
X19	I/O
Y1	I/O
Y2	I/O
Y3	I/O
Y4	I/O
Y5	I/O
Y6	I/O
Y7	I/O
Y8	I/O
Y9	I/O
Y10	I/O
Y11	I/O
Y12	I/O
Y13	I/O
Y14	I/O
Y15	I/O
Y16	I/O
Y17	I/O
Y18	I/O
Y19	I/O

Package Pin Assignments (continued)

84-Pin CQFP (Top View)

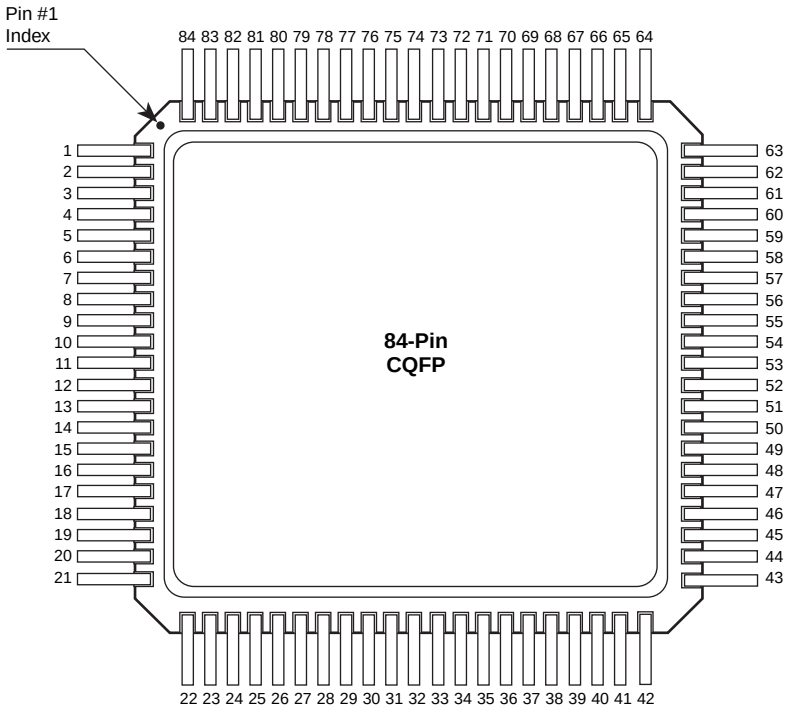

84-Pin CQFP

Pin Number	A1020B Function	A32100DX Function
1	NC	GND
2	I/O	MODE
3	I/O	I/O
4	I/O	I/O
5	I/O	I/O
6	I/O	I/O
7	GND	V_{CC}
8	GND	I/O
9	I/O	I/O
10	I/O	GND
11	I/O	V_{CC}
12	I/O	V_{CC}
13	I/O	I/O
14	V_{CC}	I/O
15	V_{CC}	I/O
16	I/O	I/O
17	I/O	GND
18	I/O	I/O
19	I/O	I/O
20	I/O	I/O
21	I/O	I/O
22	V_{CC}	GND
23	I/O	I/O
24	I/O	I/O
25	I/O	I/O (WD)
26	I/O	I/O (WD)
27	I/O	I/O
28	I/O	QCLKA, I/O
29	GND	GND
30	I/O	I/O (WD)
31	I/O	I/O
32	I/O	GND
33	I/O	V_{CC}
34	I/O	I/O (WD)
35	V_{CC}	I/O (WD)
36	I/O	QCLKB, I/O
37	I/O	I/O (WD)
38	I/O	GND
39	I/O	I/O (WD)
40	I/O	I/O (WD)
41	I/O	I/O (WD)
42	I/O	SDO, I/O

Pin Number	A1020B Function	A32100DX Function
43	I/O	GND
44	I/O	I/O
45	I/O	I/O
46	I/O	I/O
47	I/O	I/O
48	I/O	I/O
49	GND	I/O
50	GND	GND
51	I/O	TCK, I/O
52	I/O	GND
53	CLKA, I/O	V_{CC}
54	I/O	V_{CC}
55	MODE	V_{CC}
56	V_{CC}	V_{CC}
57	V_{CC}	I/O
58	I/O	I/O
59	I/O	GND
60	I/O	I/O
61	SDI, I/O	I/O
62	DCLK, I/O	I/O
63	PRA, I/O	GND
64	PRB, I/O	SDI, I/O
65	I/O	I/O (WD)
66	I/O	I/O (WD)
67	I/O	I/O (WD)
68	I/O	I/O (WD)
69	I/O	QCLKD, I/O
70	I/O	I/O (WD)
71	GND	I/O (WD)
72	I/O	PRA, I/O
73	I/O	CLKA, I/O
74	I/O	V_{CC}
75	I/O	GND
76	I/O	CLKB, I/O
77	V_{CC}	PRB, I/O
78	I/O	I/O (WD)
79	I/O	I/O (WD)
80	I/O	QCLKC, I/O
81	I/O	GND
82	I/O	I/O (WD)
83	I/O	I/O (WD)
84	I/O	DCLK, I/O

Package Pin Assignments (continued)

132-Pin CQFP (Top View)

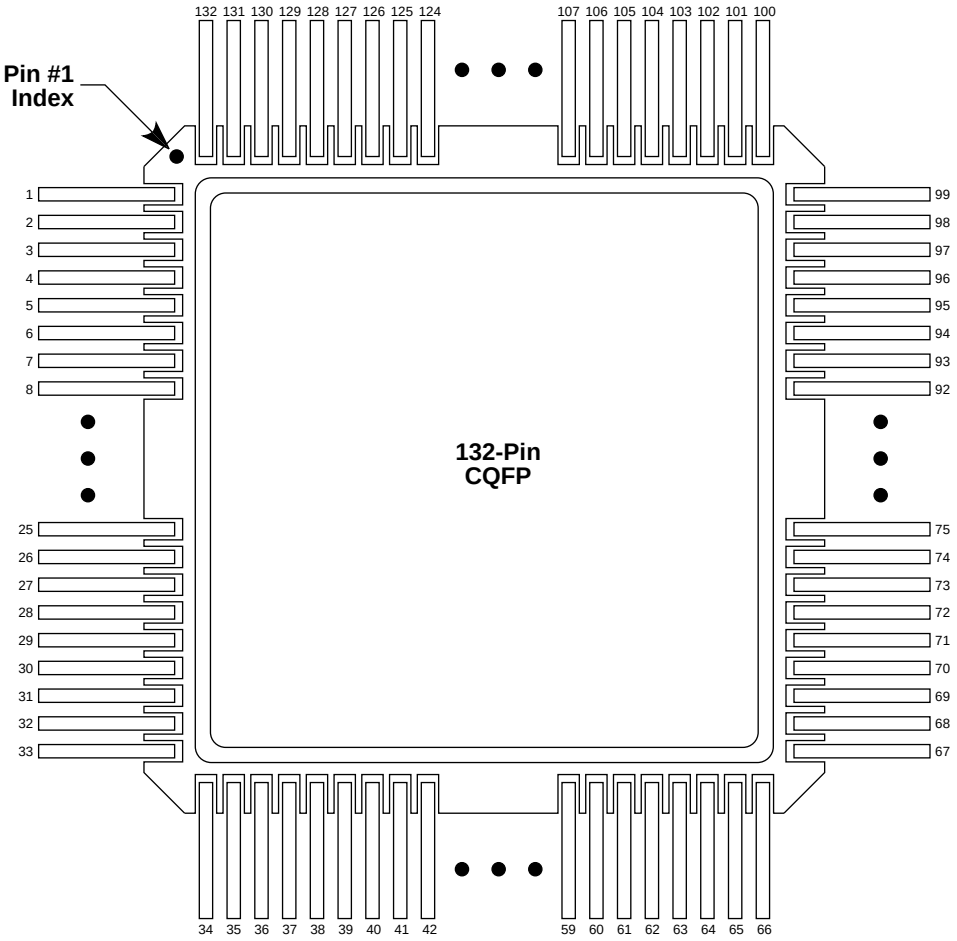

132-Pin CQFP

Pin Number	A1425A Function
1	NC
2	GND
3	SDI, I/O
4	I/O
5	I/O
6	I/O
7	I/O
8	I/O
9	MODE
10	GND
11	V_{CC}
12	I/O
13	I/O
14	I/O
15	I/O
16	I/O
17	I/O
18	I/O
19	I/O
20	I/O
21	I/O
22	V_{CC}
23	I/O
24	I/O
25	I/O
26	GND
27	V_{CC}
28	I/O
29	I/O
30	I/O
31	I/O
32	I/O
33	I/O
34	NC
35	I/O
36	GND
37	I/O
38	I/O
39	I/O
40	I/O
41	I/O
42	GND
43	V_{CC}
44	I/O

Pin Number	A1425A Function
45	I/O
46	I/O
47	I/O
48	PRB, I/O
49	I/O
50	HCLK, I/O
51	I/O
52	I/O
53	I/O
54	I/O
55	I/O
56	I/O
57	I/O
58	GND
59	V_{CC}
60	I/O
61	I/O
62	I/O
63	I/O
64	IOPCL, I/O
65	GND
66	NC
67	NC
68	I/O
69	I/O
70	I/O
71	I/O
72	I/O
73	I/O
74	GND
75	V_{CC}
76	I/O
77	I/O
78	V_{CC}
79	I/O
80	I/O
81	I/O
82	I/O
83	I/O
84	I/O
85	I/O
86	I/O
87	I/O
88	I/O

Pin Number	A1425A Function
89	V_{CC}
90	GND
91	V_{CC}
92	GND
93	I/O
94	I/O
95	I/O
96	I/O
97	I/O
98	IOCLK, I/O
99	NC
100	NC
101	GND
102	I/O
103	I/O
104	I/O
105	I/O
106	GND
107	V_{CC}
108	I/O
109	I/O
110	I/O
111	I/O
112	I/O
113	I/O
114	I/O
115	I/O
116	CLKA, I/O
117	CLKB, I/O
118	PRA, I/O
119	I/O
120	I/O
121	I/O
122	GND
123	V_{CC}
124	I/O
125	I/O
126	I/O
127	I/O
128	I/O
129	I/O
130	I/O
131	DCLK, I/O
132	NC

Package Pin Assignments (continued)

172-Pin CQFP (Top View)

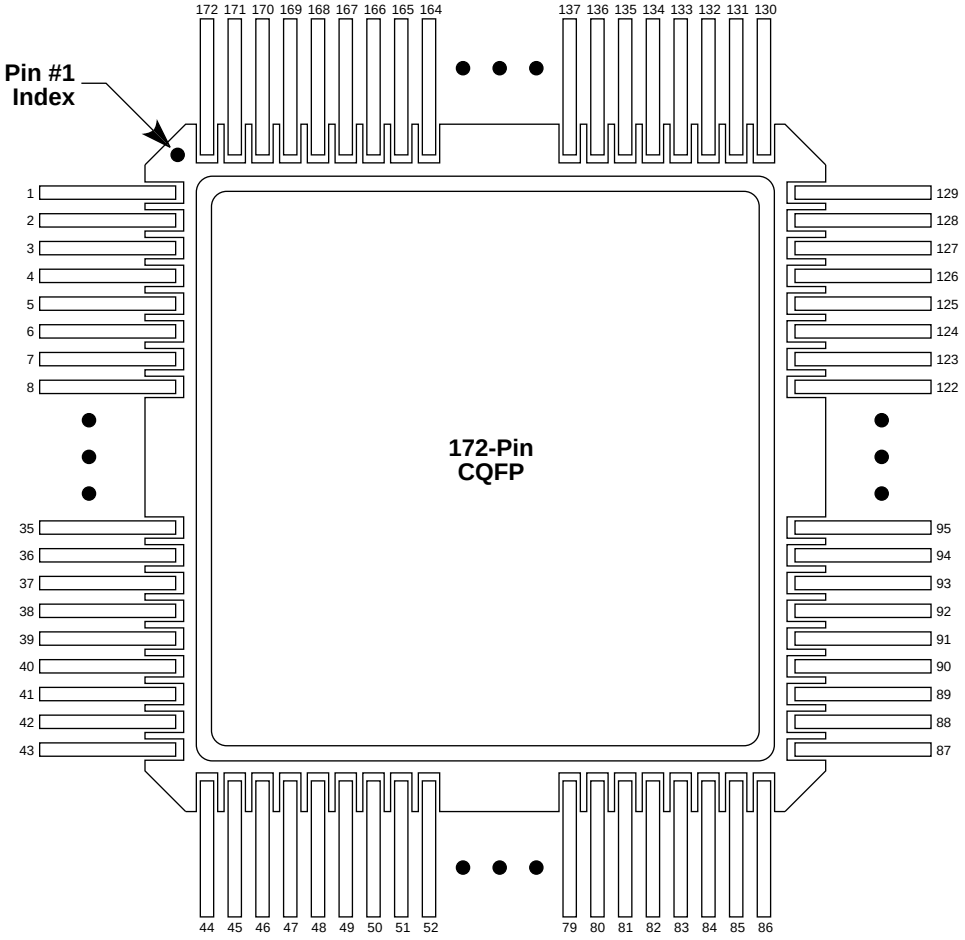

172-Pin CQFP

Pin Number	A1280A Function	A1280XL Function
1	MODE	MODE
2	I/O	I/O
3	I/O	I/O
4	I/O	I/O
5	I/O	I/O
6	I/O	I/O
7	GND	GND
8	I/O	I/O
9	I/O	I/O
10	I/O	I/O
11	I/O	I/O
12	V_{CC}	V_{CC}
13	I/O	I/O
14	I/O	I/O
15	I/O	I/O
16	I/O	I/O
17	GND	GND
18	I/O	I/O
19	I/O	I/O
20	I/O	I/O
21	I/O	I/O
22	GND	GND
23	V_{CC}	V_{CC}
24	V_{CC}	V_{CC}
25	I/O	I/O
26	I/O	I/O
27	V_{CC}	V_{CC}
28	I/O	I/O
29	I/O	I/O
30	I/O	I/O
31	I/O	I/O
32	GND	GND
33	I/O	I/O
34	I/O	I/O
35	I/O	I/O
36	I/O	I/O
37	GND	GND
38	I/O	I/O
39	I/O	I/O
40	I/O	I/O
41	I/O	I/O
42	I/O	I/O
43	I/O	I/O
44	I/O	I/O

Pin Number	A1280A Function	A1280XL Function
45	I/O	I/O
46	I/O	I/O
47	I/O	I/O
48	I/O	I/O
49	I/O	I/O
50	V_{CC}	V_{CC}
51	I/O	I/O
52	I/O	I/O
53	I/O	I/O
54	I/O	I/O
55	GND	GND
56	I/O	I/O
57	I/O	I/O
58	I/O	I/O
59	I/O	I/O
60	I/O	I/O
61	I/O	I/O
62	I/O	I/O
63	I/O	I/O
64	I/O	I/O
65	GND	GND
66	V_{CC}	V_{CC}
67	I/O	I/O
68	I/O	I/O
69	I/O	I/O
70	I/O	I/O
71	I/O	I/O
72	I/O	I/O
73	I/O	I/O
74	I/O	I/O
75	GND	GND
76	I/O	I/O
77	I/O	I/O
78	I/O	I/O
79	I/O	I/O
80	V_{CC}	V_{CC}
81	I/O	I/O
82	I/O	I/O
83	I/O	I/O
84	I/O	I/O
85	I/O	I/O
86	I/O	I/O
87	I/O	I/O
88	I/O	I/O

172-Pin CQFP (Continued)

Pin Number	A1280A Function	A1280XL Function
89	I/O	I/O
90	I/O	I/O
91	I/O	I/O
92	I/O	I/O
93	I/O	I/O
94	I/O	I/O
95	I/O	I/O
96	I/O	I/O
97	I/O	I/O
98	GND	GND
99	I/O	I/O
100	I/O	I/O
101	I/O	I/O
102	I/O	I/O
103	GND	GND
104	I/O	I/O
105	I/O	I/O
106	GND	GND
107	V_{CC}	V_{CC}
108	GND	GND
109	V_{CC}	V_{CC}
110	V_{CC}	V_{CC}
111	I/O	I/O
112	I/O	I/O
113	V_{CC}	V_{CC}
114	I/O	I/O
115	I/O	I/O
116	I/O	I/O
117	I/O	I/O
118	GND	GND
119	I/O	I/O
120	I/O	I/O
121	I/O	I/O
122	I/O	I/O
123	GND	GND
124	I/O	I/O
125	I/O	I/O
126	I/O	I/O
127	I/O	I/O
128	I/O	I/O
129	I/O	I/O
130	I/O	I/O

Pin Number	A1280A Function	A1280XL Function
131	SDI, I/O	SDI, I/O
132	I/O	I/O
133	I/O	I/O
134	I/O	I/O
135	I/O	I/O
136	V_{CC}	V_{CC}
137	I/O	I/O
138	I/O	I/O
139	I/O	I/O
140	I/O	I/O
141	GND	GND
142	I/O	I/O
143	I/O	I/O
144	I/O	I/O
145	I/O	I/O
146	I/O	I/O
147	I/O	I/O
148	PRA, I/O	PRA, I/O
149	I/O	I/O
150	CLKA, I/O	CLKA, I/O
151	V_{CC}	V_{CC}
152	GND	GND
153	I/O	I/O
154	CLKB, I/O	CLKB, I/O
155	I/O	I/O
156	PRB, I/O	PRB, I/O
157	I/O	I/O
158	I/O	I/O
159	I/O	I/O
160	I/O	I/O
161	GND	GND
162	I/O	I/O
163	I/O	I/O
164	I/O	I/O
165	I/O	I/O
166	V_{CC}	V_{CC}
167	I/O	I/O
168	I/O	I/O
169	I/O	I/O
170	I/O	I/O
171	DCLK, I/O	DCLK, I/O
172	I/O	I/O

Package Pin Assignments (continued)

196-Pin CQFP (Top View)

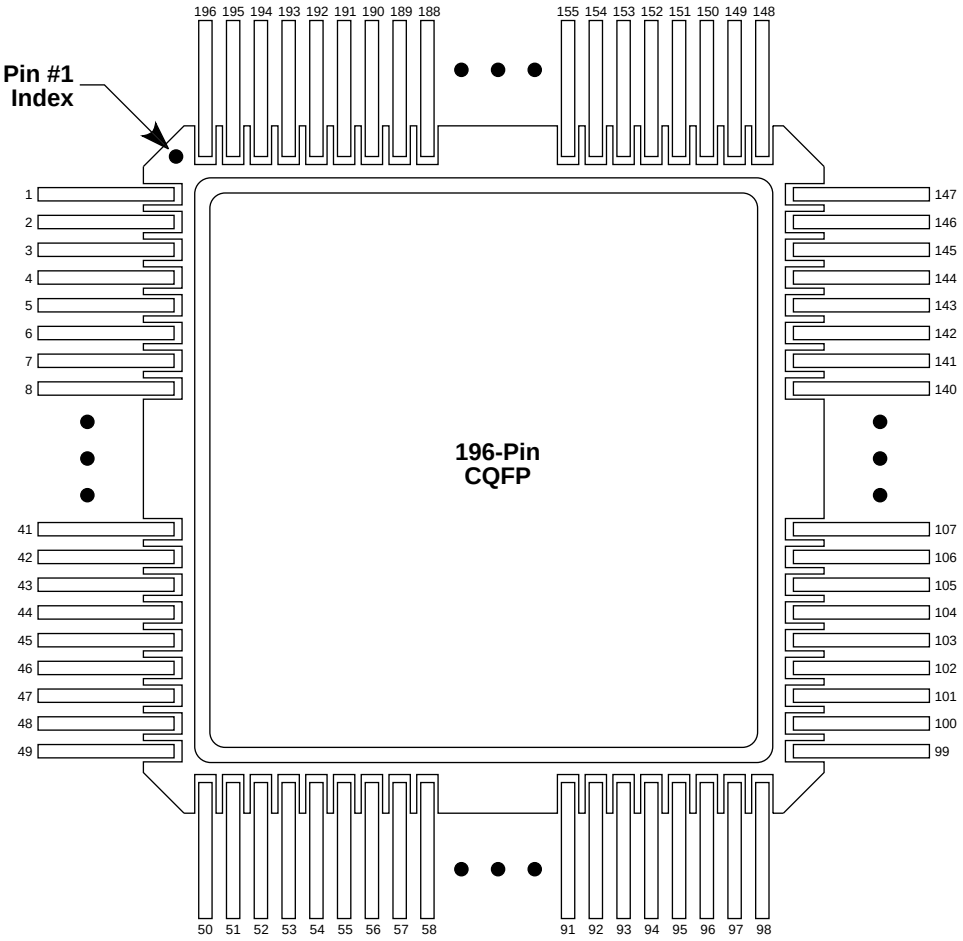

196-Pin CQFP

Pin Number	A1460A Function
1	GND
2	SDI, I/O
3	I/O
4	I/O
5	I/O
6	I/O
7	I/O
8	I/O
9	I/O
10	I/O
11	MODE
12	V_{CC}
13	GND
14	I/O
15	I/O
16	I/O
17	I/O
18	I/O
19	I/O
20	I/O
21	I/O
22	I/O
23	I/O
24	I/O
25	I/O
26	I/O
27	I/O
28	I/O
29	I/O
30	I/O
31	I/O
32	I/O
33	I/O
34	I/O
35	I/O
36	I/O
37	GND
38	V_{CC}
39	V_{CC}
40	I/O
41	I/O
42	I/O
43	I/O

Pin Number	A1460A Function
44	I/O
45	I/O
46	I/O
47	I/O
48	I/O
49	I/O
50	I/O
51	GND
52	GND
53	I/O
54	I/O
55	I/O
56	I/O
57	I/O
58	I/O
59	V_{CC}
60	I/O
61	I/O
62	I/O
63	I/O
64	GND
65	I/O
66	I/O
67	I/O
68	I/O
69	I/O
70	I/O
71	I/O
72	I/O
73	I/O
74	I/O
75	PRB, I/O
76	I/O
77	HCLK, I/O
78	I/O
79	I/O
80	I/O
81	I/O
82	I/O
83	I/O
84	I/O
85	I/O
86	GND

Pin Number	A1460A Function
87	I/O
88	I/O
89	I/O
90	I/O
91	I/O
92	I/O
93	I/O
94	V_{CC}
95	I/O
96	I/O
97	I/O
98	GND
99	I/O
100	IOPCL, I/O
101	GND
102	I/O
103	I/O
104	I/O
105	I/O
106	I/O
107	I/O
108	I/O
109	I/O
110	V_{CC}
111	V_{CC}
112	GND
113	I/O
114	I/O
115	I/O
116	I/O
117	I/O
118	I/O
119	I/O
120	I/O
121	I/O
122	I/O
123	I/O
124	I/O
125	I/O
126	I/O
127	I/O
128	I/O
129	I/O

196-Pin CQFP (Continued)

Pin Number	A1460A Function
130	I/O
131	I/O
132	I/O
133	I/O
134	I/O
135	I/O
136	I/O
137	V_{CC}
138	GND
139	GND
140	V_{CC}
141	I/O
142	I/O
143	I/O
144	I/O
145	I/O
146	I/O
147	I/O
148	IOCLK, I/O
149	GND
150	I/O
151	I/O
152	I/O

Pin Number	A1460A Function
153	I/O
154	I/O
155	V_{CC}
156	I/O
157	I/O
158	I/O
159	I/O
160	I/O
161	I/O
162	GND
163	I/O
164	I/O
165	I/O
166	I/O
167	I/O
168	I/O
169	I/O
170	I/O
171	I/O
172	CLKA, I/O
173	CLKB, I/O
174	PRA, I/O
175	I/O

Pin Number	A1460A Function
176	I/O
177	I/O
178	I/O
179	I/O
180	I/O
181	I/O
182	I/O
183	GND
184	I/O
185	I/O
186	I/O
187	I/O
188	I/O
189	V_{CC}
190	I/O
191	I/O
192	I/O
193	GND
194	I/O
195	I/O
196	DCLK, I/O

Package Pin Assignments (continued)

208-Pin CQFP (Top View)

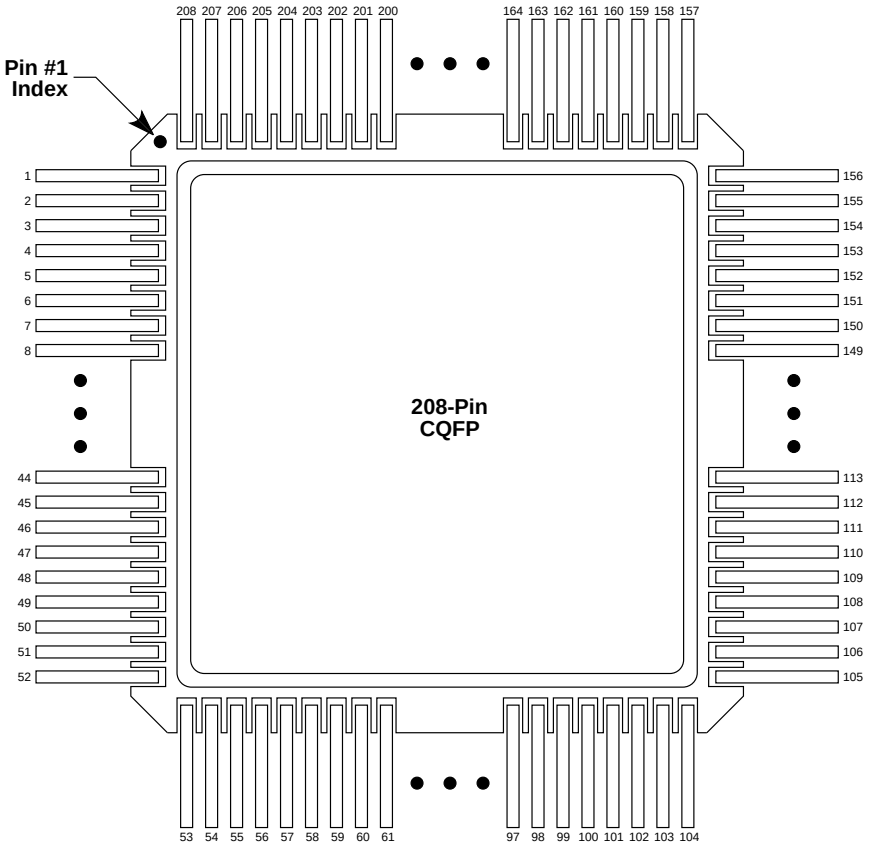

208-Pin CQFP

Pin Number	A32100DX Function
1	GND
2	V_{CC}
3	MODE
4	I/O
5	I/O
6	I/O
7	I/O
8	I/O
9	I/O
10	I/O
11	I/O
12	I/O
13	I/O
14	I/O
15	I/O
16	I/O
17	V_{CC}
18	I/O
19	I/O
20	I/O
21	I/O
22	GND
23	I/O
24	I/O
25	I/O
26	I/O
27	GND
28	V_{CC}
29	V_{CC}
30	I/O
31	I/O
32	V_{CC}
33	I/O
34	I/O
35	I/O
36	I/O
37	I/O
38	I/O
39	I/O
40	I/O
41	I/O
42	I/O
43	I/O

Pin Number	A32100DX Function
44	I/O
45	I/O
46	I/O
47	I/O
48	I/O
49	I/O
50	I/O
51	I/O
52	GND
53	GND
54	TMS, I/O
55	TDI, I/O
56	I/O
57	I/O (WD)
58	I/O (WD)
59	I/O
60	V_{CC}
61	I/O
62	I/O
63	I/O
64	I/O
65	QCLKA, I/O
66	I/O (WD)
67	I/O (WD)
68	I/O
69	I/O
70	I/O (WD)
71	I/O (WD)
72	I/O
73	I/O
74	I/O
75	I/O
76	I/O
77	I/O
78	GND
79	V_{CC}
80	V_{CC}
81	I/O
82	I/O
83	I/O
84	I/O
85	I/O (WD)
86	I/O (WD)

Pin Number	A32100DX Function
87	I/O
88	I/O
89	I/O
90	I/O
91	QCLKB, I/O
92	I/O
93	I/O (WD)
94	I/O (WD)
95	I/O
96	I/O
97	I/O
98	V_{CC}
99	I/O
100	I/O (WD)
101	I/O (WD)
102	I/O
103	SDO, I/O
104	I/O
105	GND
106	V_{CC}
107	I/O
108	I/O
109	I/O
110	I/O
111	I/O
112	I/O
113	I/O
114	I/O
115	I/O
116	I/O
117	I/O
118	I/O
119	I/O
120	I/O
121	I/O
122	I/O
123	I/O
124	I/O
125	I/O
126	GND
127	I/O
128	TCK, I/O
129	GND

208-Pin CQFP (Continued)

Pin Number	A32100DX Function
130	V_{CC}
131	GND
132	V_{CC}
133	V_{CC}
134	I/O
135	I/O
136	V_{CC}
137	I/O
138	I/O
139	I/O
140	I/O
141	I/O
142	I/O
143	I/O
144	I/O
145	I/O
146	I/O
147	I/O
148	I/O
149	I/O
150	GND
151	I/O
152	I/O
153	I/O
154	I/O
155	I/O
156	I/O

Pin Number	A32100DX Function
157	GND
158	I/O
159	SDI, I/O
160	I/O
161	I/O (WD)
162	I/O (WD)
163	I/O
164	V_{CC}
165	I/O
166	I/O
167	I/O
168	I/O (WD)
169	I/O (WD)
170	I/O
171	QCLKD, I/O
172	I/O
173	I/O
174	I/O
175	I/O
176	I/O (WD)
177	I/O (WD)
178	PRA, I/O
179	I/O
180	CLKA, I/O
181	I/O
182	V_{CC}
183	V_{CC}

Pin Number	A32100DX Function
184	GND
185	I/O
186	CLKB, I/O
187	I/O
188	PRB, I/O
189	I/O
190	I/O (WD)
191	I/O (WD)
192	I/O
193	I/O
194	I/O (WD)
195	I/O (WD)
196	QCLKC, I/O
197	I/O
198	I/O
199	I/O
200	I/O
201	I/O
202	V_{CC}
203	I/O (WD)
204	I/O (WD)
205	I/O
206	I/O
207	DCLK, I/O
208	I/O

Package Pin Assignments (continued)

256-Pin CQFP (Top View)

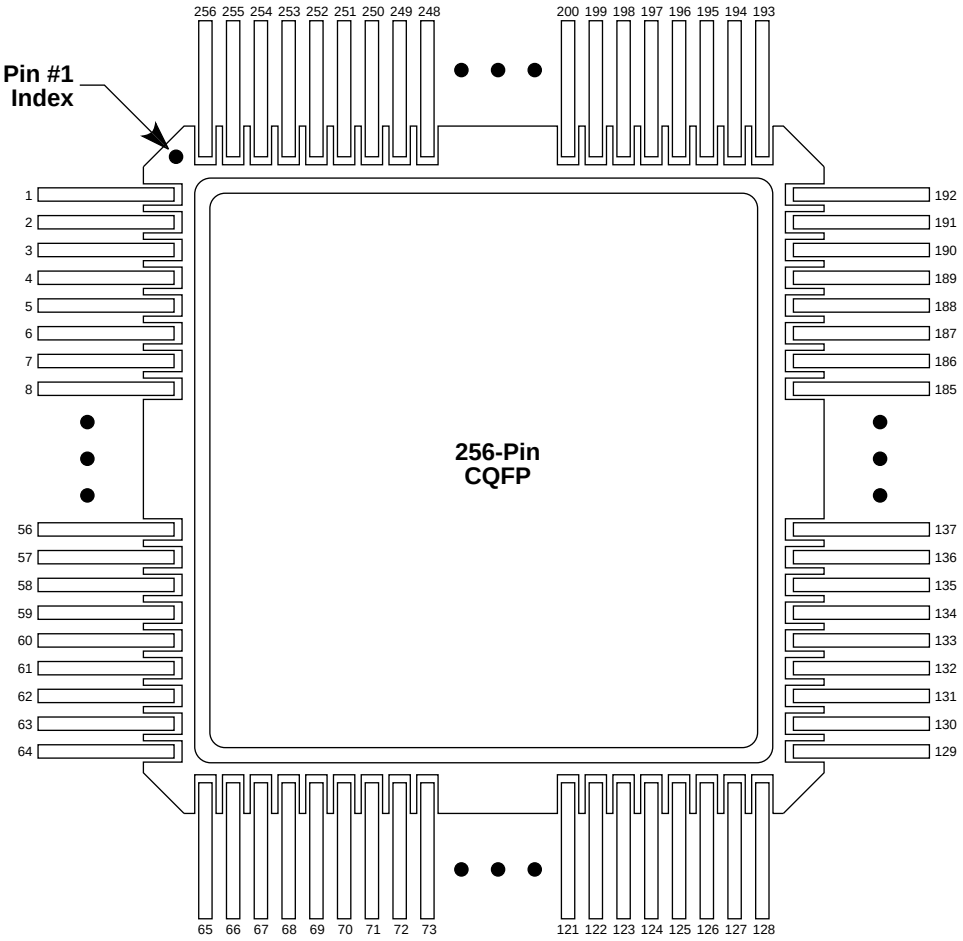

256-Pin CQFP

Pin Number	A14100A Function	A32200DX Function
1	GND	NC
2	SDI, I/O	GND
3	I/O	I/O
4	I/O	I/O
5	I/O	I/O
6	I/O	I/O
7	I/O	I/O
8	I/O	I/O
9	I/O	I/O
10	I/O	GND
11	MODE	I/O
12	I/O	I/O
13	I/O	I/O
14	I/O	I/O
15	I/O	I/O
16	I/O	I/O
17	I/O	I/O
18	I/O	I/O
19	I/O	I/O
20	I/O	I/O
21	I/O	I/O
22	I/O	I/O
23	I/O	I/O
24	I/O	I/O
25	I/O	I/O
26	I/O	V_{CC}
27	I/O	I/O
28	V_{CC}	I/O
29	GND	V_{CC}
30	V_{CC}	V_{CC}
31	GND	GND
32	I/O	V_{CC}
33	I/O	GND
34	I/O	TCK, I/O
35	I/O	I/O
36	I/O	GND
37	I/O	I/O
38	I/O	I/O
39	I/O	I/O
40	I/O	I/O
41	I/O	I/O
42	I/O	I/O
43	I/O	I/O
44	I/O	I/O

Pin Number	A14100A Function	A32200DX Function
45	I/O	I/O
46	V_{CC}	I/O
47	I/O	I/O
48	I/O	GND
49	I/O	I/O
50	I/O	I/O
51	I/O	I/O
52	I/O	I/O
53	I/O	I/O
54	I/O	I/O
55	I/O	I/O
56	I/O	I/O
57	I/O	I/O
58	I/O	I/O
59	GND	I/O
60	I/O	V_{CC}
61	I/O	GND
62	I/O	GND
63	I/O	NC
64	I/O	NC
65	I/O	NC
66	I/O	I/O
67	I/O	SDO, I/O
68	I/O	I/O
69	I/O	I/O (WD)
70	I/O	I/O (WD)
71	I/O	I/O
72	I/O	V_{CC}
73	I/O	I/O
74	I/O	I/O
75	I/O	I/O
76	I/O	I/O (WD)
77	I/O	GND
78	I/O	I/O (WD)
79	I/O	I/O
80	I/O	QCLKB, I/O
81	I/O	I/O
82	I/O	I/O
83	I/O	I/O
84	I/O	I/O
85	I/O	I/O
86	I/O	I/O
87	I/O	I/O (WD)
88	I/O	I/O (WD)

Pin Number	A14100A Function	A32200DX Function
89	I/O	I/O
90	PRB, I/O	I/O
91	GND	I/O
92	V_{CC}	I/O
93	GND	I/O
94	V_{CC}	I/O
95	I/O	V_{CC}
96	HCLK, I/O	V_{CC}
97	I/O	GND
98	I/O	GND
99	I/O	I/O
100	I/O	I/O
101	I/O	I/O
102	I/O	I/O
103	I/O	I/O
104	I/O	I/O
105	I/O	I/O (WD)
106	I/O	I/O (WD)
107	I/O	I/O
108	I/O	I/O
109	I/O	I/O (WD)
110	GND	I/O (WD)
111	I/O	I/O
112	I/O	QCLKA, I/O
113	I/O	I/O
114	I/O	GND
115	I/O	I/O
116	I/O	I/O
117	I/O	I/O
118	I/O	I/O
119	I/O	V_{CC}
120	I/O	I/O
121	I/O	I/O (WD)
122	I/O	I/O (WD)
123	I/O	I/O
124	I/O	I/O
125	I/O	TDI, I/O
126	I/O	TMS, I/O
127	IOPCL, I/O	GND
128	GND	NC
129	I/O	NC
130	I/O	NC
131	I/O	GND
132	I/O	I/O

256-Pin CQFP (Continued)

Pin Number	A14100A Function	A32200DX Function
133	I/O	I/O
134	I/O	I/O
135	I/O	I/O
136	I/O	I/O
137	I/O	I/O
138	I/O	I/O
139	I/O	GND
140	I/O	I/O
141	V_{CC}	I/O
142	I/O	I/O
143	I/O	I/O
144	I/O	I/O
145	I/O	I/O
146	I/O	I/O
147	I/O	I/O
148	I/O	I/O
149	I/O	I/O
150	I/O	I/O
151	I/O	I/O
152	I/O	I/O
153	I/O	I/O
154	I/O	I/O
155	I/O	V_{CC}
156	I/O	I/O
157	I/O	I/O
158	GND	V_{CC}
159	V_{CC}	V_{CC}
160	GND	GND
161	V_{CC}	I/O
162	I/O	I/O
163	I/O	I/O
164	I/O	I/O
165	I/O	GND
166	I/O	I/O
167	I/O	I/O
168	I/O	I/O
169	I/O	I/O
170	I/O	V_{CC}
171	I/O	I/O
172	I/O	I/O
173	I/O	I/O
174	V_{CC}	I/O

Pin Number	A14100A Function	A32200DX Function
175	GND	I/O
176	GND	I/O
177	I/O	I/O
178	I/O	I/O
179	I/O	I/O
180	I/O	GND
181	I/O	I/O
182	I/O	I/O
183	I/O	I/O
184	I/O	I/O
185	I/O	I/O
186	I/O	I/O
187	I/O	I/O
188	IOCLK, I/O	MODE
189	GND	V_{CC}
190	I/O	GND
191	I/O	NC
192	I/O	NC
193	I/O	NC
194	I/O	I/O
195	I/O	DCLK, I/O
196	I/O	I/O
197	I/O	I/O
198	I/O	I/O
199	I/O	I/O (WD)
200	I/O	I/O (WD)
201	I/O	V_{CC}
202	I/O	I/O
203	I/O	I/O
204	I/O	I/O
205	I/O	I/O
206	I/O	GND
207	I/O	I/O
208	I/O	I/O
209	I/O	QCLKC, I/O
210	I/O	I/O
211	I/O	I/O (WD)
212	I/O	I/O (WD)
213	I/O	I/O
214	I/O	I/O
215	I/O	I/O (WD)
216	I/O	I/O (WD)

Pin Number	A14100A Function	A32200DX Function
217	I/O	I/O
218	I/O	PRB, I/O
219	CLKA, I/O	I/O
220	CLKB, I/O	CLKB, I/O
221	V_{CC}	I/O
222	GND	GND
223	V_{CC}	GND
224	GND	V_{CC}
225	PRA, I/O	V_{CC}
226	I/O	I/O
227	I/O	CLKA, I/O
228	I/O	I/O
229	I/O	PRA, I/O
230	I/O	I/O
231	I/O	I/O
232	I/O	I/O (WD)
233	I/O	I/O (WD)
234	I/O	I/O
235	I/O	I/O
236	I/O	I/O
237	I/O	I/O
238	I/O	I/O
239	I/O	I/O
240	GND	QCLKD, I/O
241	I/O	I/O
242	I/O	I/O (WD)
243	I/O	GND
244	I/O	I/O (WD)
245	I/O	I/O
246	I/O	I/O
247	I/O	I/O
248	I/O	V_{CC}
249	I/O	I/O
250	I/O	I/O (WD)
251	I/O	I/O (WD)
252	I/O	I/O
253	I/O	SDI, I/O
254	I/O	I/O
255	I/O	GND
256	DCLK, I/O	NC

Package Mechanical Drawings

84-Pin CPGA

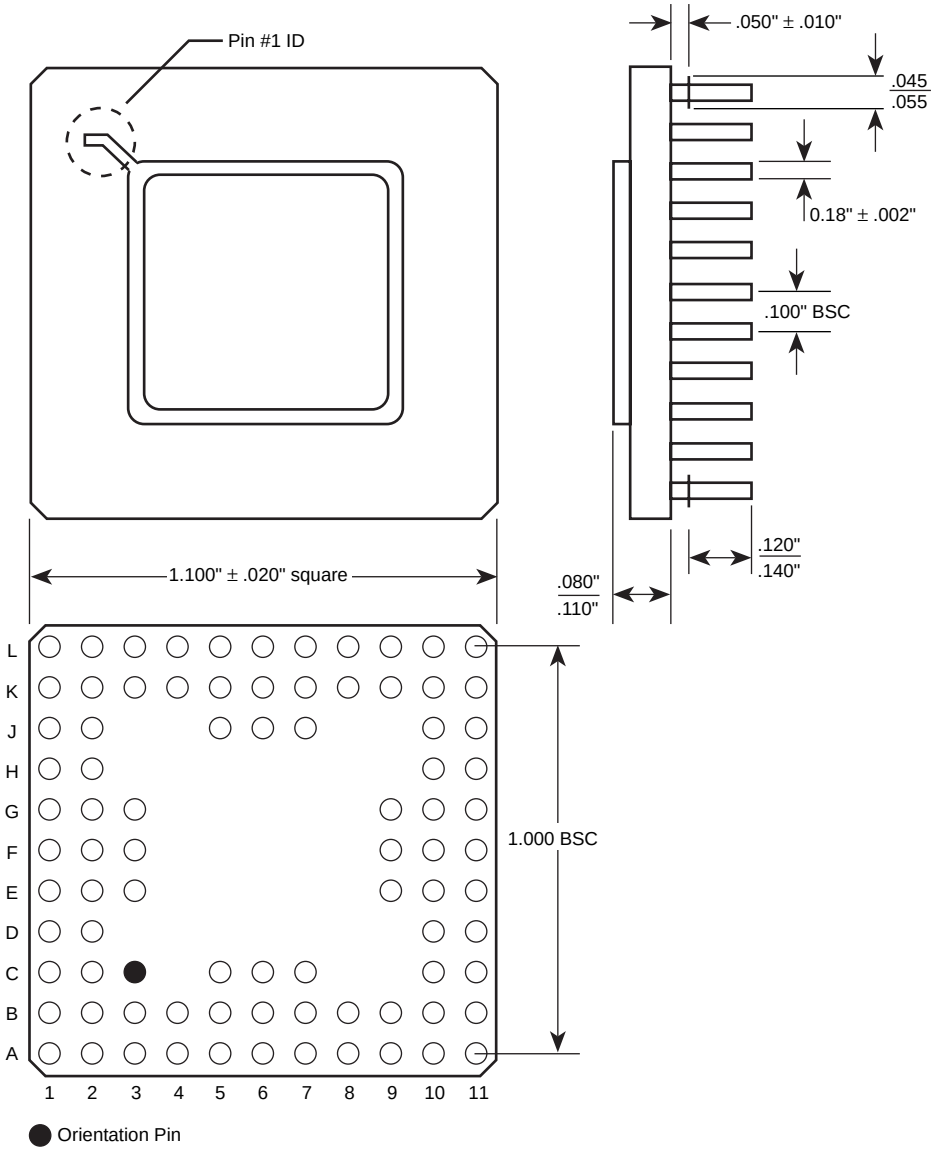

Notes:

1. *All dimensions are in inches unless otherwise stated.*
2. *BSC—Basic Spacing between Centers. This is a theoretical true position dimension and so has no tolerance.*

Package Mechanical Drawings (continued)

132-Pin CPGA

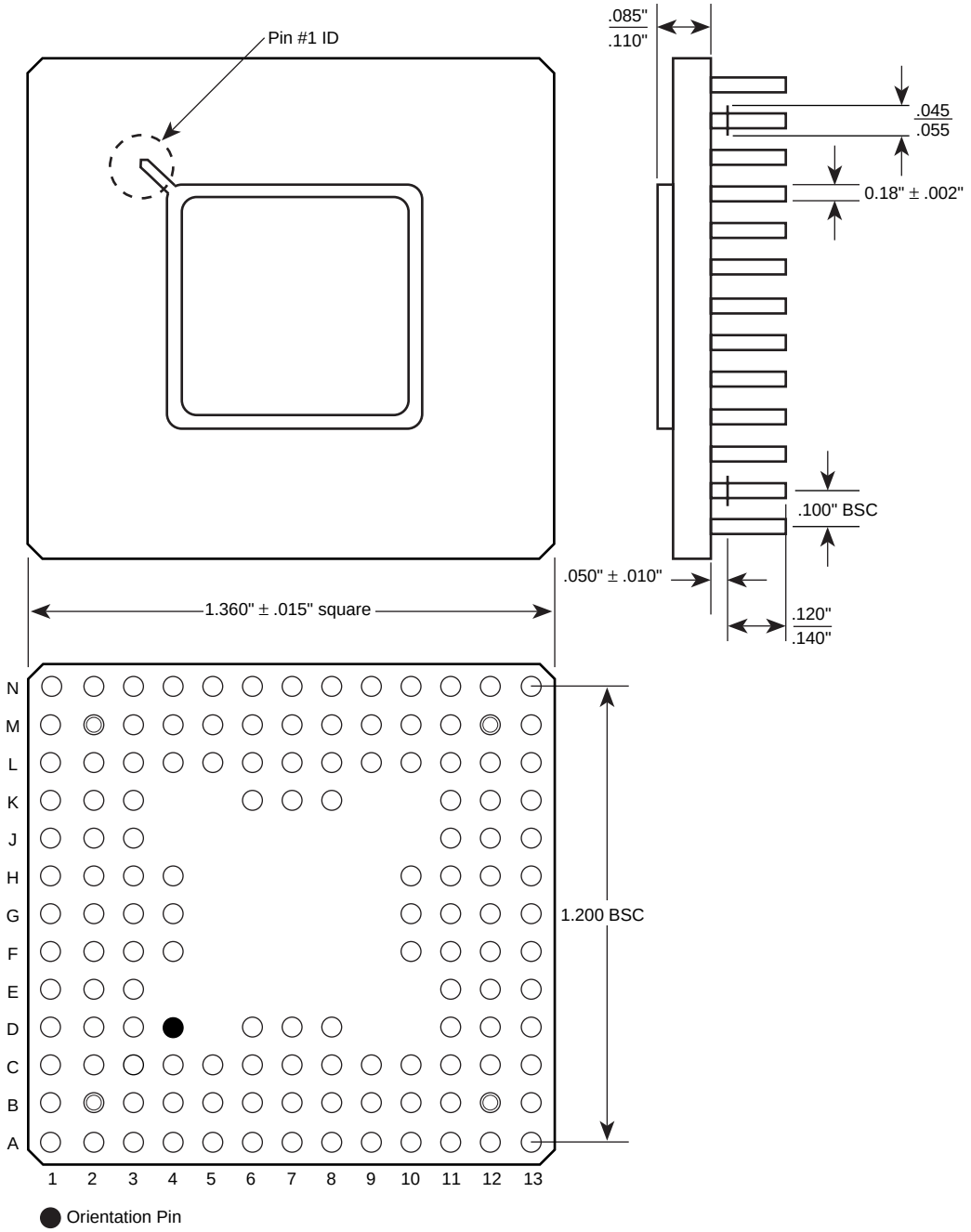

Notes:

1. *All dimensions are in inches unless otherwise stated.*
2. *BSC—Basic Spacing between Centers. This is a theoretical true position dimension and so has no tolerance.*

Package Mechanical Drawings (continued)

133-Pin CPGA

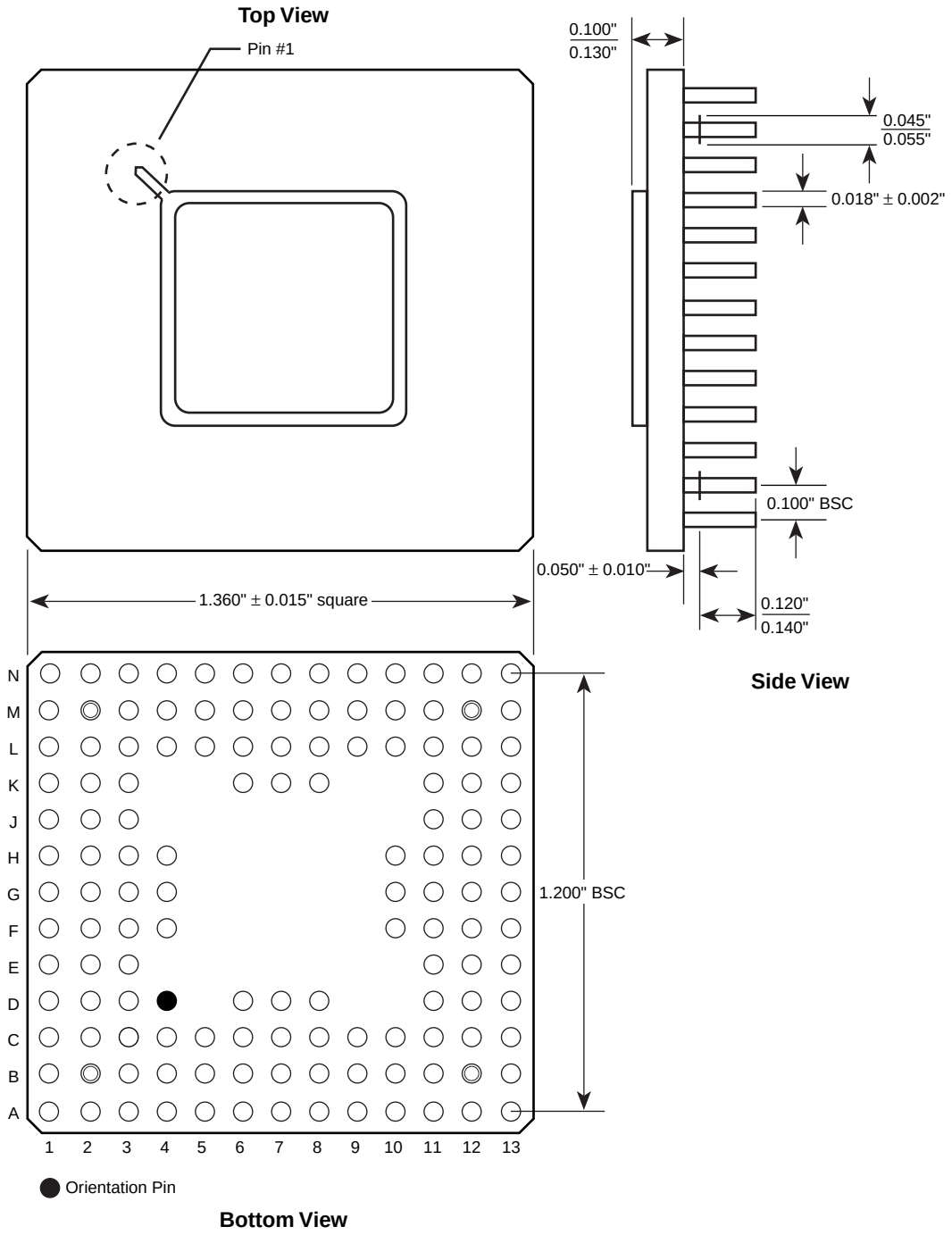

Notes:

1. *All dimensions are in inches unless otherwise stated.*
2. *BSC—Basic Spacing between Centers. This is a theoretical true position dimension and so has no tolerance.*

Package Mechanical Drawings (continued)

176-Pin CPGA

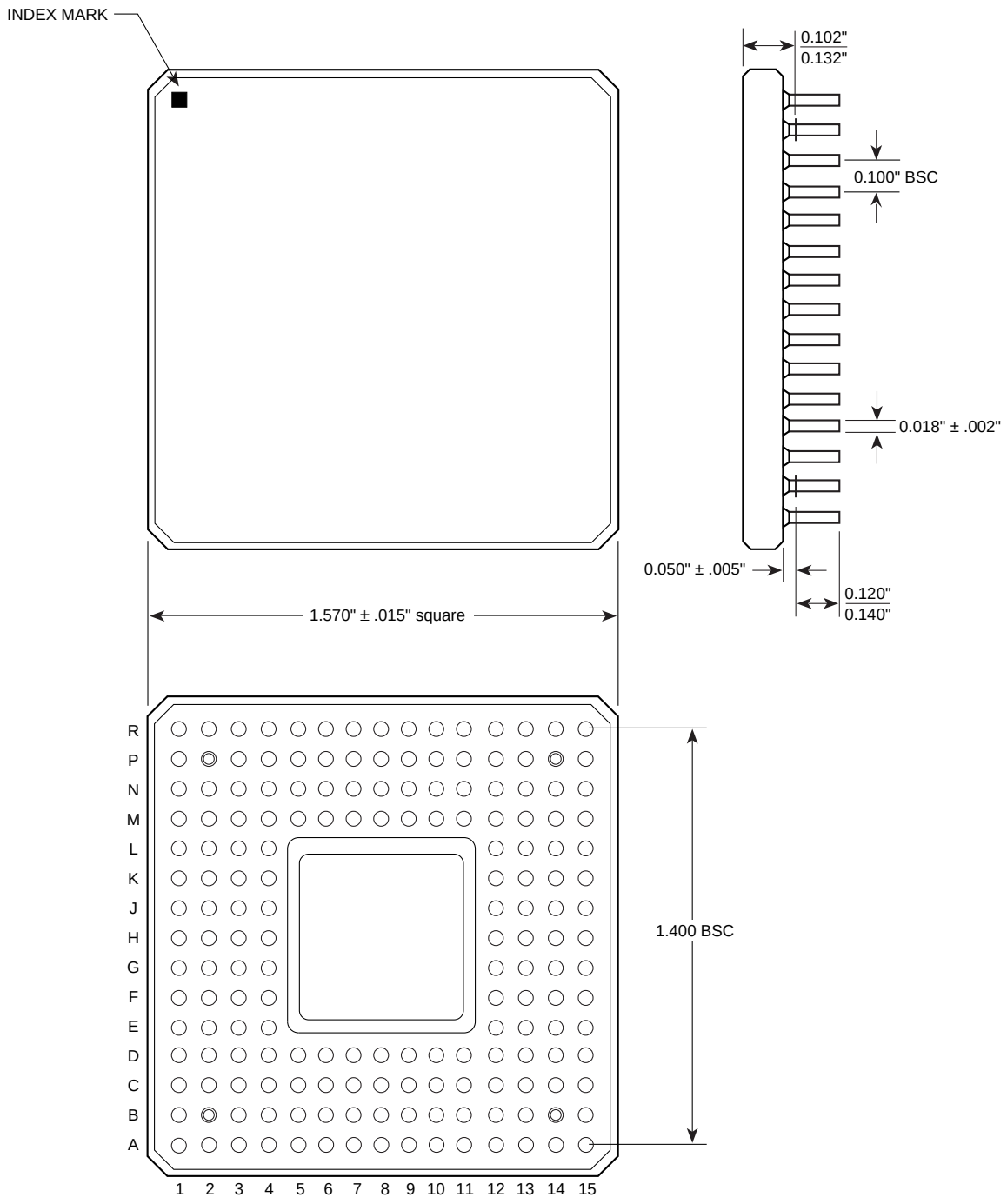

Notes:

1. *All dimensions are in inches unless otherwise stated.*
2. *BSC—Basic Spacing between Centers. This is a theoretical true position dimension and so has no tolerance.*

Package Mechanical Drawings (continued)

207-Pin CPGA

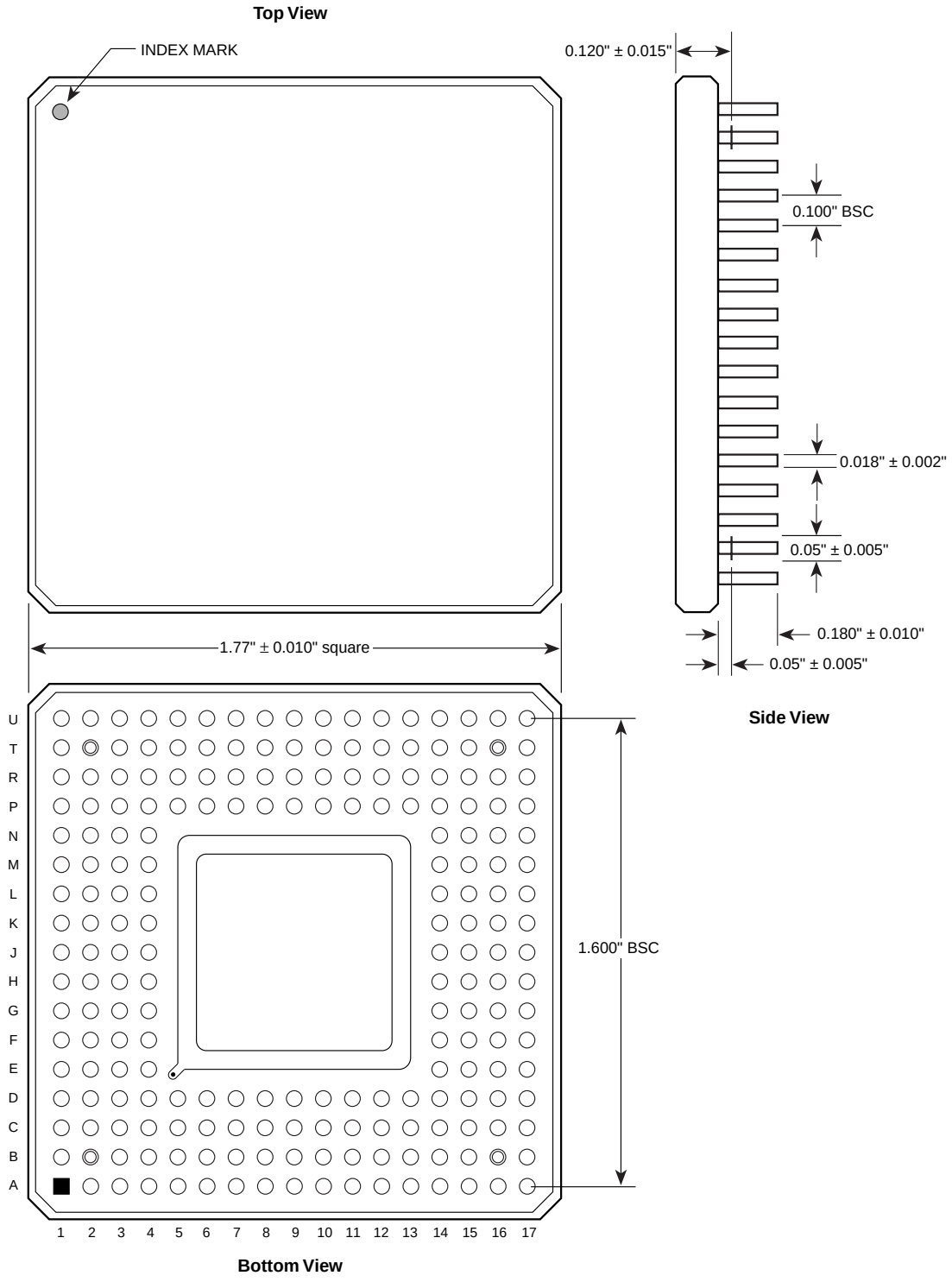

Notes:

1. *All dimensions are in inches unless otherwise stated.*
2. *BSC—Basic Spacing between Centers. This is a theoretical true position dimension and so has no tolerance.*

Package Mechanical Drawings (continued)

257-Pin CPGA

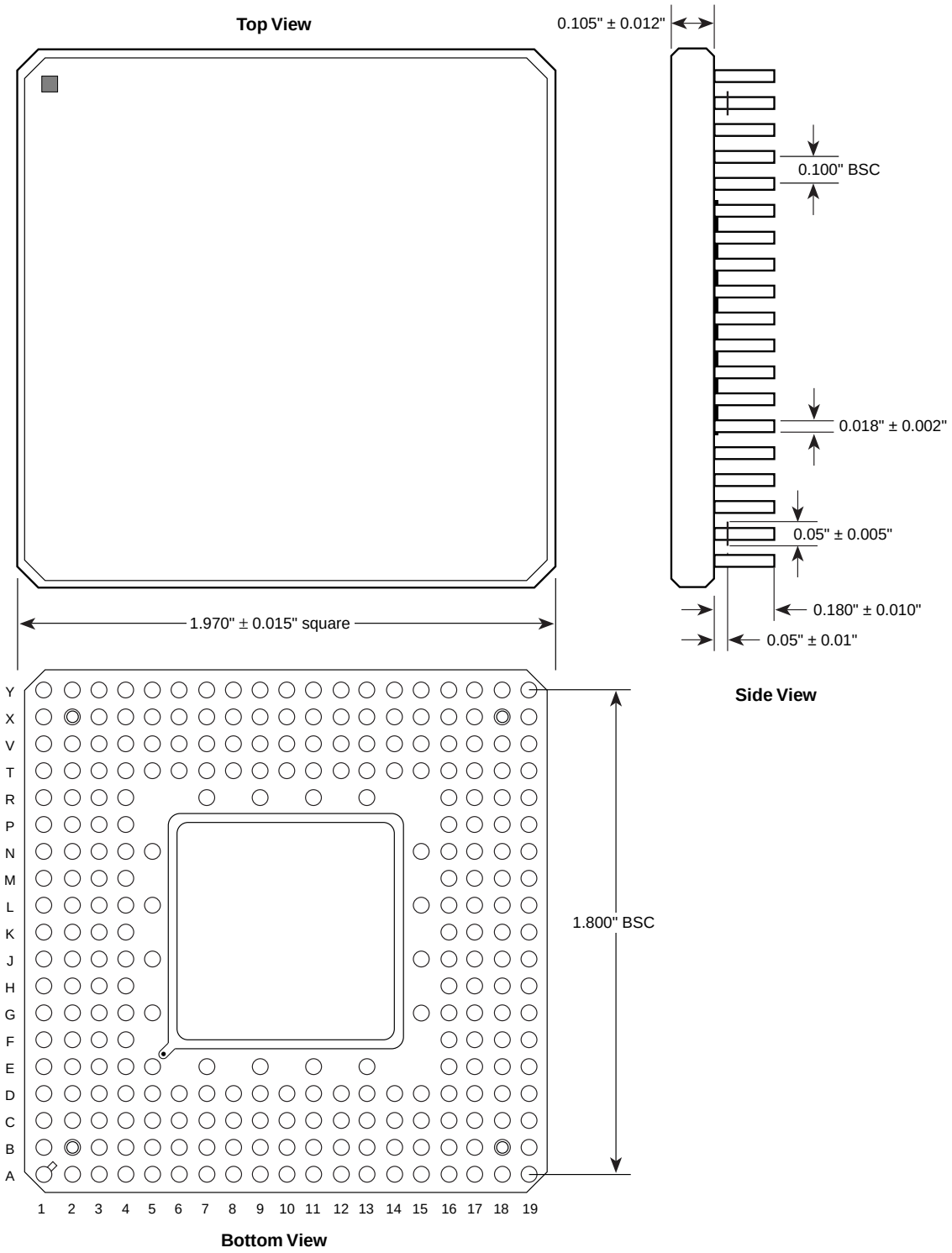

Notes:

1. *All dimensions are in inches unless otherwise stated.*
2. *BSC—Basic Spacing between Centers. This is a theoretical true position dimension and so has no tolerance.*

Package Mechanical Drawings (continued)

84-Pin CQFP

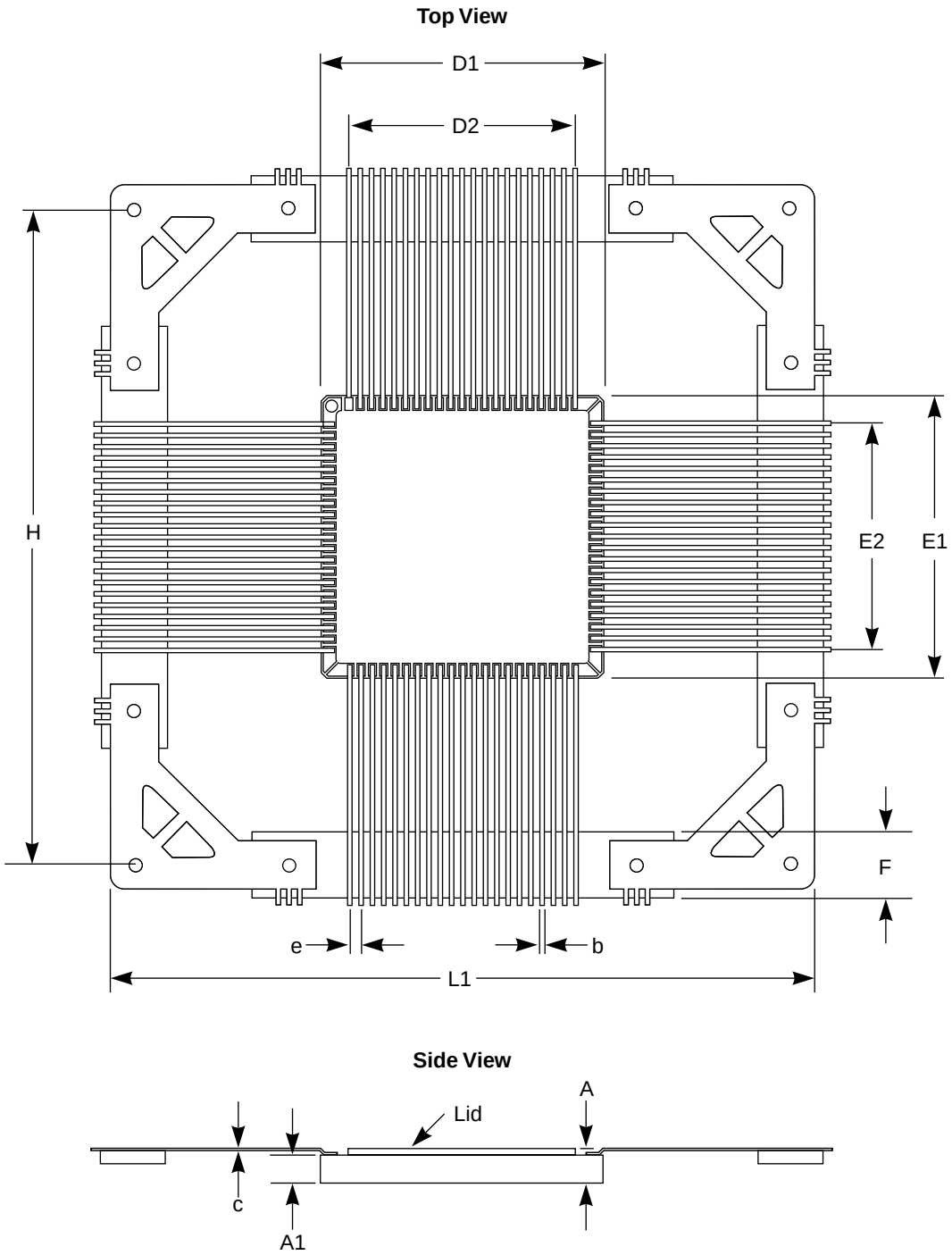

Notes:

1. *Seal ring and lid are connected to Ground.*
2. *Lead material is Kovar with minimum 50 microinches gold plate over nickel.*
3. *Packages are shipped unformed with the ceramic tie bar in a test carrier.*

Package Mechanical Drawings (continued)

132-Pin, 172-Pin, 196-Pin, 208-Pin, and 256-Pin CQFP (Cavity Up)

Top View

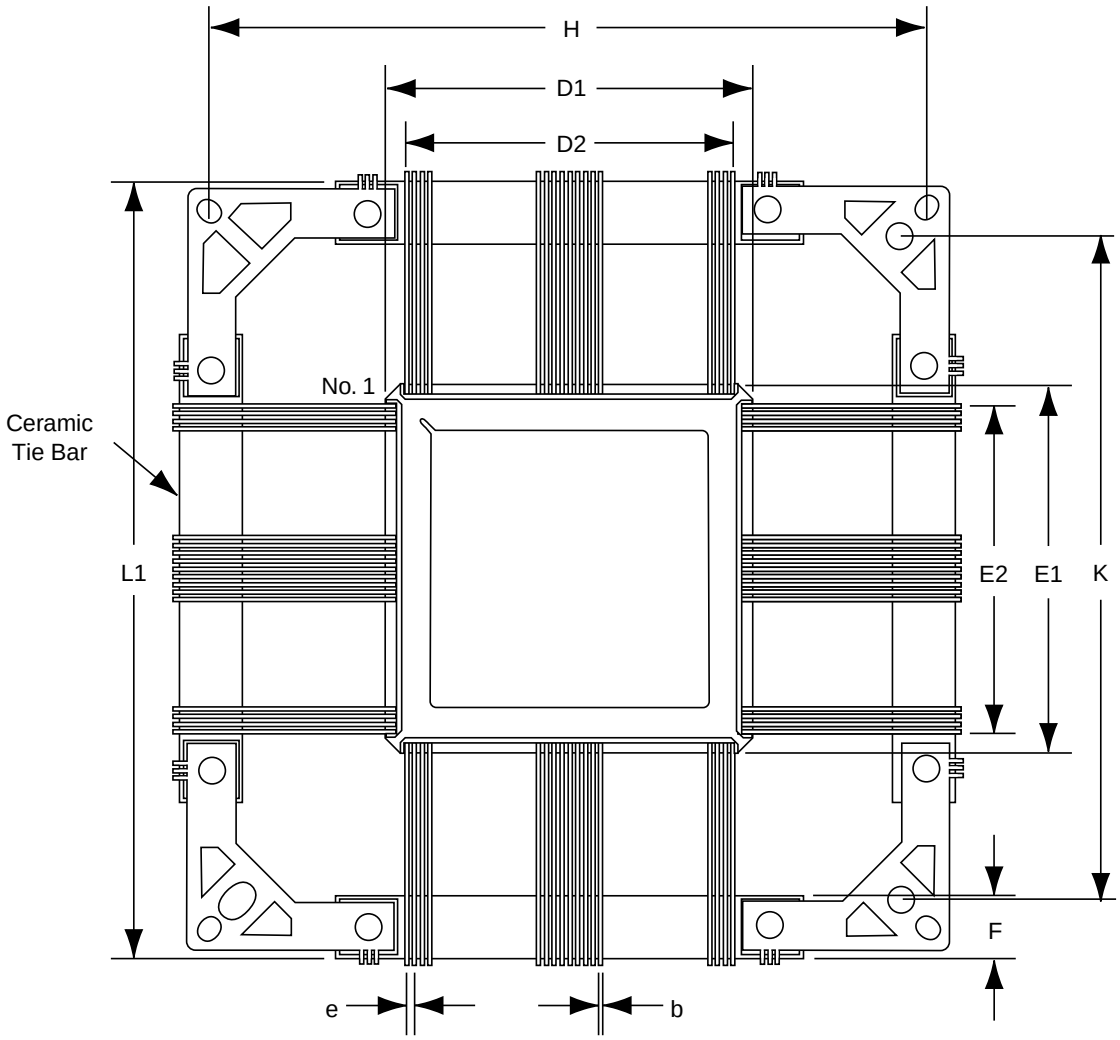

Side View

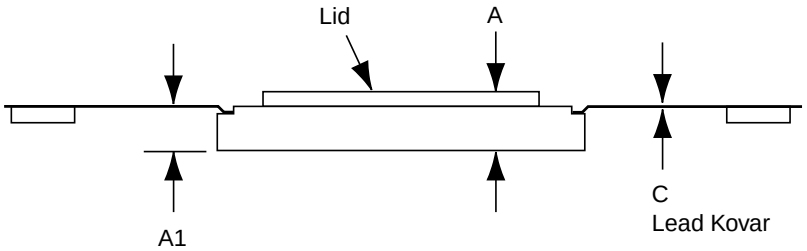

Notes:

1. *Outside leadframe holes (from dimension H) are circular for the CQ208 and CQ256.*
2. *Seal ring and lid are connected to Ground.*
3. *Lead material is Kovar with minimum 50 microinches gold plate over nickel.*
4. *Packages are shipped unformed with the ceramic tie bar.*
5. *32200DX – CQ208 has a heat sink on the back.*

CQFP (Ceramic Quad Flat Pack)

	CQFP 84			CQFP 132			CQFP 172			CQFP 196		
Symbol	**Min.**	**Nom.**	**Max.**	**Min.**	**Nom.**	**Max.**	**Min.**	**Nom.**	**Max.**	**Min.**	**Nom.**	**Max.**
A	0.070	0.090	0.100	0.094	0.105	0.116	0.094	0.105	0.116	0.094	0.105	0.116
A1	0.060	0.075	0.080	0.080	0.090	0.100	0.080	0.090	0.100	0.080	0.090	0.100
b	0.008	0.010	0.012	0.007	0.008	0.010	0.007	0.008	0.010	0.007	0.008	0.010
c	0.004	0.006	0.008	0.004	0.006	0.008	0.004	0.006	0.008	0.004	0.006	0.008
D1/E1	0.640	0.650	0.660	0.940	0.950	0.960	1.168	1.180	1.192	1.336	1.350	1.364
D2/E2	0.500 BSC			0.800 BSC			1.050 BSC			1.200 BSC		
e	0.025 BSC			0.025 BSC			0.025 BSC			0.025 BSC		
F	0.130	0.140	0.150	0.325	0.350	0.375	0.175	0.200	0.225	0.175	0.200	0.225
H	1.460 BSC			2.320 BSC			2.320 BSC			2.320 BSC		
K	—			2.140 BSC			2.140 BSC			2.140 BSC		
L1	1.595	1.600	1.615	2.485	2.500	2.505	2.485	2.495	2.505	2.485	2.495	2.505

Note:

1. *All dimensions are in inches except CQ208 and CQ256, which are in millimeters.*
2. *BSC equals Basic Spacing between Centers. This is a theoretical true position dimension and so has no tolerance.*

CQFP (Ceramic Quad Flat Pack)

	CQFP 208			CQFP 256		
Symbol	**Min.**	**Nom.**	**Max.**	**Min.**	**Nom.**	**Max.**
A	2.78	3.17	3.56	2.28	2.67	3.06
A1	2.43	2.79	3.15	1.93	2.29	2.65
b	0.18	0.20	0.22	0.18	0.20	0.22
c	0.11	0.15	0.17	0.11	0.15	0.18
D1/E1	28.96	29.21	29.46	35.64	36.00	36.36
D2/E2	25.5 BSC			31.5 BSC		
e	0.50 BSC			0.50 BSC		
F	7.05	7.75	8.45	7.05	7.75	8.45
H	70.00 BSC			70.00 BSC		
K	65.90 BSC			65.90 BSC		
L1	74.60	75.00	75.40	74.60	75.00	75.40

Note:

1. *All dimensions are in inches except CQ208 and CQ256, which are in millimeters.*
2. *BSC equals Basic Spacing between Centers. This is a theoretical true position dimension and so has no tolerance.*

Actel and the Actel logo are registered trademarks of Actel Corporation.
All other trademarks are the property of their owners.

http://www.actel.com

Actel Europe Ltd.
Daneshill House, Lutyens Close
Basingstoke, Hampshire RG24 8AG
United Kingdom
Tel: +44-(0)125-630-5600
Fax: +44-(0)125-635-5420

Actel Corporation
955 East Arques Avenue
Sunnyvale, California 94086
USA
Tel: (408) 739-1010
Fax: (408) 739-1540

Actel Asia-Pacific
EXOS Ebisu Bldg. 4F
1-24-14 Ebisu Shibuya-ku
Tokyo 150 Japan
Tel: +81-(0)3-3445-7671
Fax: +81-(0)3-3445-7668

5192641-2/1.00